Electricity Questions Part 1

35 Questions

Name: _____

Class: _____

Date: _____

Time:

Marks:

Comments:

Q1.

Most electrical appliances are connected to the mains electricity using three-core cables.

(a) What is the approximate value of the potential difference of the UK mains electricity supply?

Tick **one** box.

23 V ☐

230 V ☐

300 V ☐

350 V ☐

(1)

(b) **Figure 1** shows a three-core cable.

Figure 1

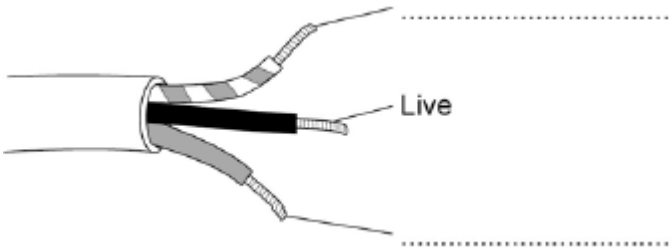

Use answers from the box to label the wires and complete **Figure 1**.

Earth	**Negative**	**Neutral**

(2)

(c) In the UK the three wires in a three-core cable are always the same colours.

Why are the wires always the same colours?

Tick **one** box.

Each wire is made by a different company. ☐

It is easy to identify each wire. ☐

They are cheaper to manufacture. ☐

(1)

(d) Touching the live wire is dangerous.

Use answers from the box to complete the sentences.

current	**resistance**	**shock**	**force**	**voltage**

Touching the live wire causes a large potential difference to exist across the body.

This causes a _____ through the body, which

results in an electric _____

(2)

(e) What is the approximate frequency of the UK mains electricity supply?

Tick **one** answer.

50 Hz ☐

75 Hz ☐

100 Hz ☐

150 Hz ☐

(1)

(f) **Figure 2** shows how power stations transfer electrical power to consumers using the National Grid.

Figure 2

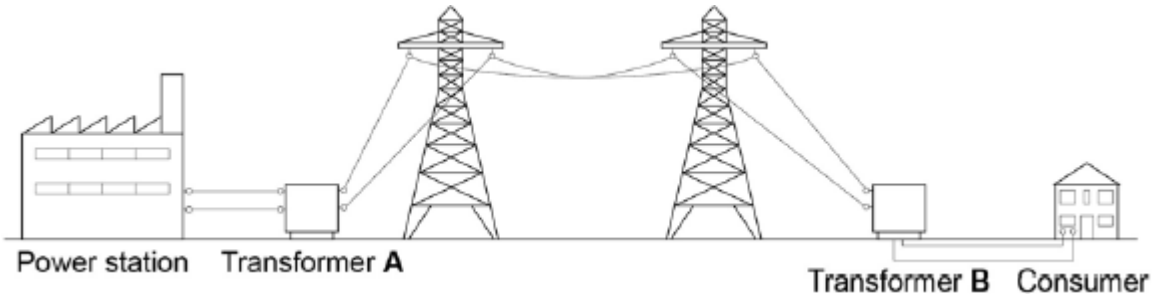

The power station generates electricity at a voltage of 25 kV.

Transformer **A** increases the voltage by a factor of 16.

What is the voltage output of transformer **A**?

_____

_____

_____

Output voltage = _____ kV

(2)

(g) Why is the voltage increased by transformer **A**?

Tick **one** box.

To reduce the energy lost due to heating	☐
To increase the power	☐
To increase the current	☐

(1)

(h) Why is it important that the voltage is decreased by transformer **B**?

Tick **one** box.

Less energy is used by consumers	☐
It is safer for consumers	☐
It reduces consumers' electricity bills	☐

(1)
(Total 11 marks)

Q2.

Figure 1 shows a circuit diagram containing two identical lamps arranged in parallel.

The reading on the ammeter is 186 mA.

Figure 1

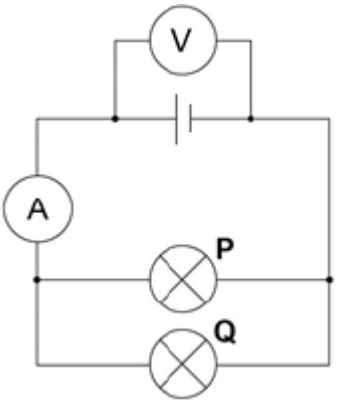

(a) Which statement about the current through the lamps is true?

Tick **one** box.

The current through both lamp **P** and lamp **Q** is **0.093 A** ☐

The current through both lamp **P** and lamp **Q** is **0.186 A** ☐

The current through both lamp **P** and lamp **Q** is **0.93 A** ☐

The current through both lamp **P** and lamp **Q** is **1.86 A** ☐

(1)

(b) One of the lamps breaks and is not replaced.

Which statement about the current in the other lamp is true?

Tick **one** box.

The current through the lamp is **0.093 A** ☐

The current through the lamp is **0.186 A** ☐

The current through the lamp is **0.93 A** ☐

The current through the lamp is **1.86 A** ☐

(1)

(c) **Figure 2** shows a circuit that can be used to alter the brightness of a lamp.

Figure 2

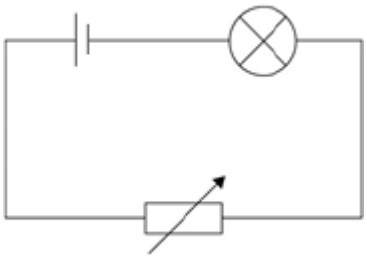

The resistance of the variable resistor is increased.

What effect will this have on the brightness of the lamp?

Explain your answer.

_____

_____

_____

_____

(2)

(d) When the potential difference across the lamp is 3.3 V, the current is 0.15 A.

Write down the equation that links current, potential difference and resistance.

Equation _____

(1)

(e) Calculate the resistance of the lamp.

_____

_____

_____

Resistance = _____ Ω

(3)

(f) Sketch a current–potential difference graph for a filament lamp.

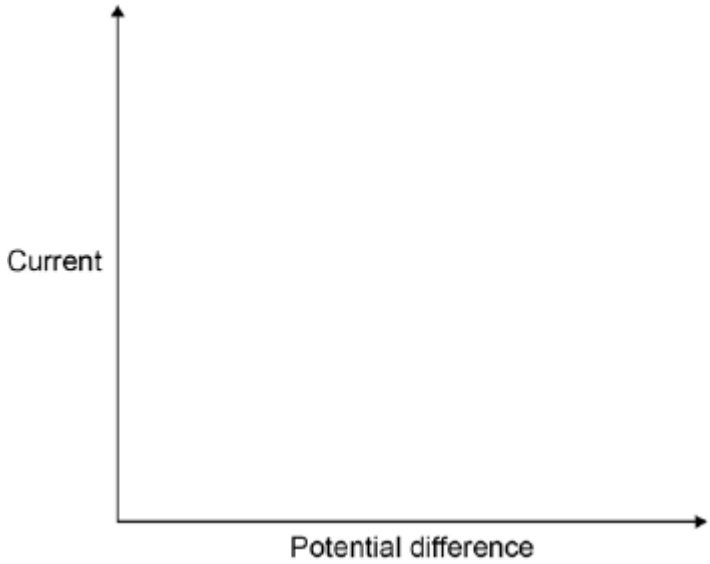

(1)

(Total 9 marks)

Q3.

An electric current is a flow of electrical charge through a circuit.

(a) Complete the sentence.

Use a word from the box.

atoms	**electrons**	**ions**	**molecules**

Metals are good conductors of electricity because electrical charge is transferred by delocalised _____

(1)

(b) Draw **one** line from each symbol to the name of the component.

Standard symbol	Name of component
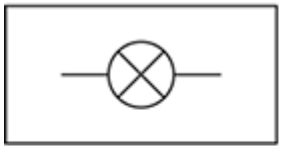	Battery
	Lamp
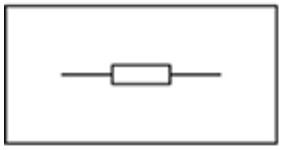	LED
	Resistor
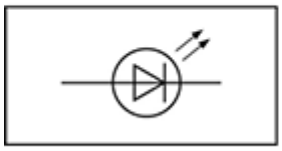	Switch

(3)

(c) The table below shows information about some electrical appliances.

Electrical appliance	Power in watts
 Hairdryer	1500
 Kettle	2500
 Electric hob	3000
 Television	360

A student plugs all four of the appliances into one multi-way socket.

The mains electricity is 230 V.

The highest safe current in the socket is 30 A.

Explain why it is not safe to use all four appliances at the same time.

In your answer you should:

- calculate the total power needed
- use the equation

current = power ÷ potential difference

to calculate the total current needed.

_____

_____

_____

_____

_____

_____

_____

_____

(4)

(d) The figure below shows how electrical power is transferred from power stations to consumers using the National Grid.

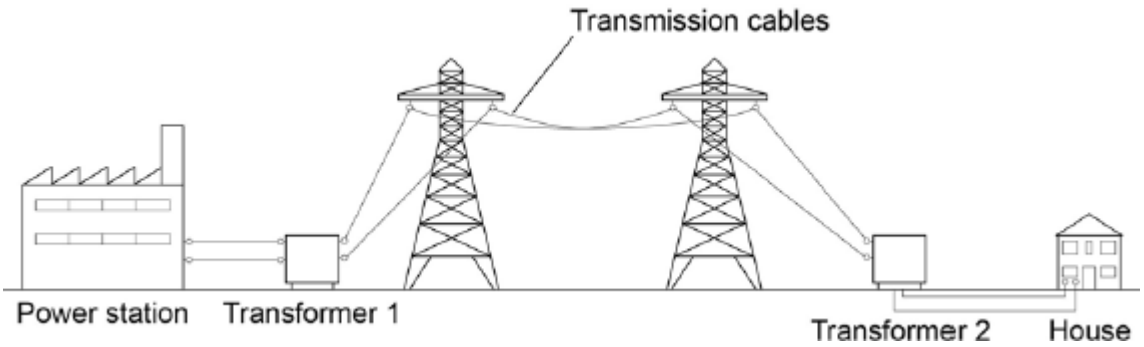

Transformer 1 is a step-up transformer.

Explain why step-up transformers are used in the National Grid.

_____

_____

_____

_____

_____

_____

(3)

(e) What is the purpose of Transformer 2?

_____

_____

(1)

(f) In a power station 900 MJ of thermal energy were released by burning natural gas.

Write down the equation that links efficiency, useful input energy transfer and useful output energy transfer.

_____

(1)

(g) In a power station 900 MJ of thermal energy were released by burning natural gas.

Only 405 MJ was generated.

Calculate the efficiency of this energy transfer.

_____

_____

_____

Efficiency = _____

(2)

(Total 15 marks)

Q4.

Aluminium is produced from an ore called bauxite.

Bauxite contains aluminium oxide.

Look at **Figure 1**.

Figure 1

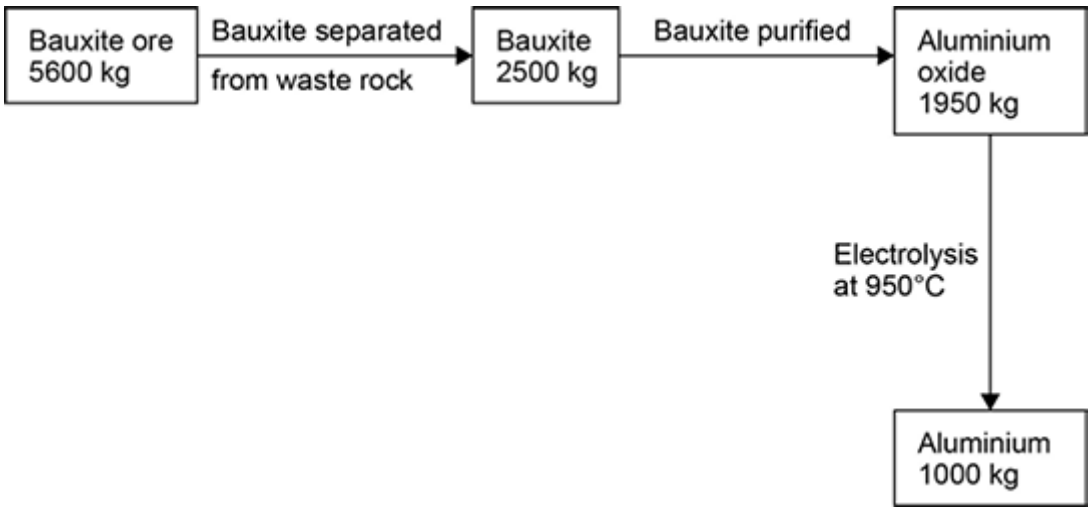

(a) Calculate the percentage of bauxite that is converted into aluminium oxide.

_____

Percentage = _____

(2)

(b) Show by calculation that the mass of aluminium produced is less than that expected from 1 950 kg aluminium oxide (Al_2O_3).

You should state the difference in the mass of aluminium expected and the mass of aluminium produced to three significant figures.

Relative atomic masses (A_r): O = 16; Al = 27

(3)

(c) **Figure 2** shows an electrolysis cell used to extract aluminium.

Figure 2

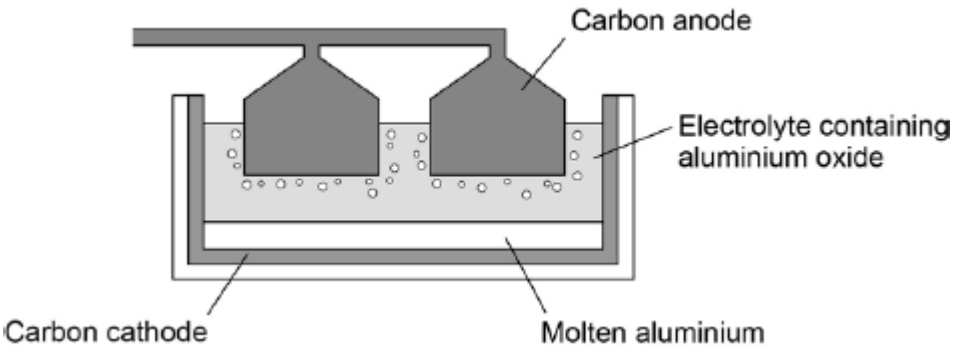

Why does the carbon anode used in the electrolysis cell need to be continually replaced?

(3)

(d) In an electrolysis cell the current is 1.5×10^5 A, at a potential difference of 4V.

Calculate the energy transferred by the electrolysis cell in 24 hours.

_____

_____

_____

_____

_____

Energy transferred = _____ J

(5)

(e) The half equation at the cathode is:

$Al^{3+} + 3e^- \longrightarrow Al$

Calculate the number of moles of electrons needed to produce 1 000 kg of aluminium.

Give your answer to three significant figures.

Relative atomic mass (A_r): Al = 27

_____

_____

_____

_____

Answer = _____ moles

(3)

(Total 16 marks)

Q5.

We use mains electricity in our homes.

(a) What is the frequency of the UK mains electricity supply?

Tick **one** box.

23 Hz ☐

50 Hz ☐

230 Hz ☐

500 Hz ☐

(1)

(b) Many appliances in the home use three-core electrical cable.

Look at the figure below.

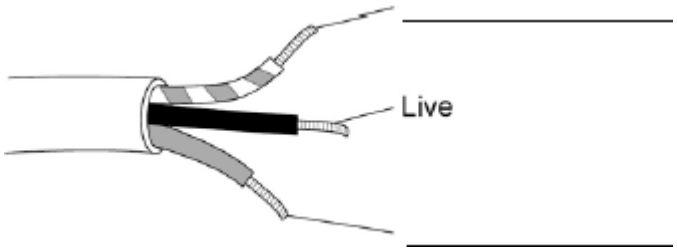

Label the wires in the cable in the figure above.

Use words from the box.

Earth	**Negative**	**Neutral**	**Positive**

(2)

(c) The sentences explain how touching the live wire in a cable can cause an electric shock.

Complete the sentences.

Use words from the box.

current	**force**	**resistance**	**potential difference**

Touching the live wire causes a large _____ to exist across the body.

This causes a _____ through the body, which results in an electric shock.

(2)

(d) A heater has a power rating of 2500 W.

The heater is turned on for 180 seconds.

Calculate the energy transferred by the heater.

Use the equation:

energy transferred = power × time

Give your answer in kilojoules (kJ).

_____

_____

_____

Energy transferred = _____ kJ

(3)

(e) Write down the equation that links charge flow, energy transferred and potential difference.

_____

(1)

(f) The mains electricity supply is at 230 V.

A different heater transfers 4200 J of energy.

Calculate the charge flow through the heater.

_____

_____

_____

Charge flow = _____ C

(3)

(Total 12 marks)

Q6.

A student used electrical circuits to investigate the relationship between resistance, potential difference and current.

Figure 1 shows how the student connects the first circuit he set up.

Figure 1

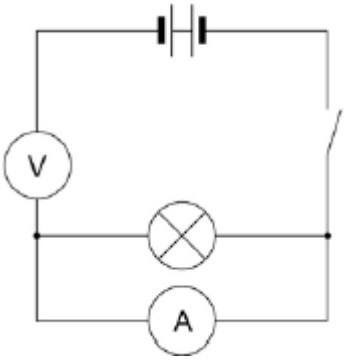

(a) The circuit does not work.

Draw the correct circuit.

(2)

(b) The student then sets up the circuit correctly.

Look at **Figure 2**.

Figure 2

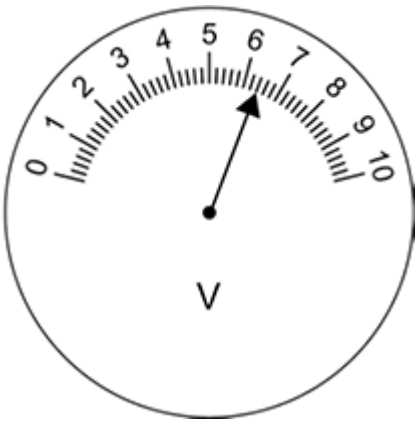

What is the reading on the voltmeter?

_____

(1)

(c) The student then set up a circuit to investigate how resistance affects the brightness of a lamp.

Figure 3 shows the circuit he set up.

Figure 3

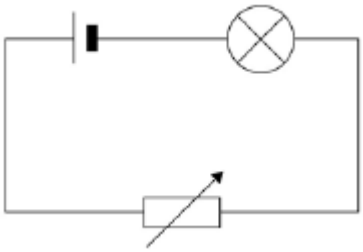

The student increases the resistance of the variable resistor.

What effect does this have on the brightness of the lamp?

Explain your answer.

_____

_____

_____

_____

(2)

(d) Write down the equation that links current, potential difference and resistance.

_____

(1)

(e) When the potential difference across the lamp is 3.3 V the current is 0.15 A.

Calculate the resistance of the lamp in the student's experiment.

_____

_____

_____

Resistance = _____ Ω

(3)

(Total 9 marks)

Q7.

A student is investigating some electrical components.

(a) Describe how the student could set up a circuit to find the resistance of a lamp.

You should include a circuit diagram in your answer.

_____

_____

_____

_____

_____

_____

_____

(4)

(b) The student is given an electrical component in a sealed box.

She has to find out what the electrical component is by experiment.

The student records the current and the potential difference for the component.

Her results are shown in the figure below.

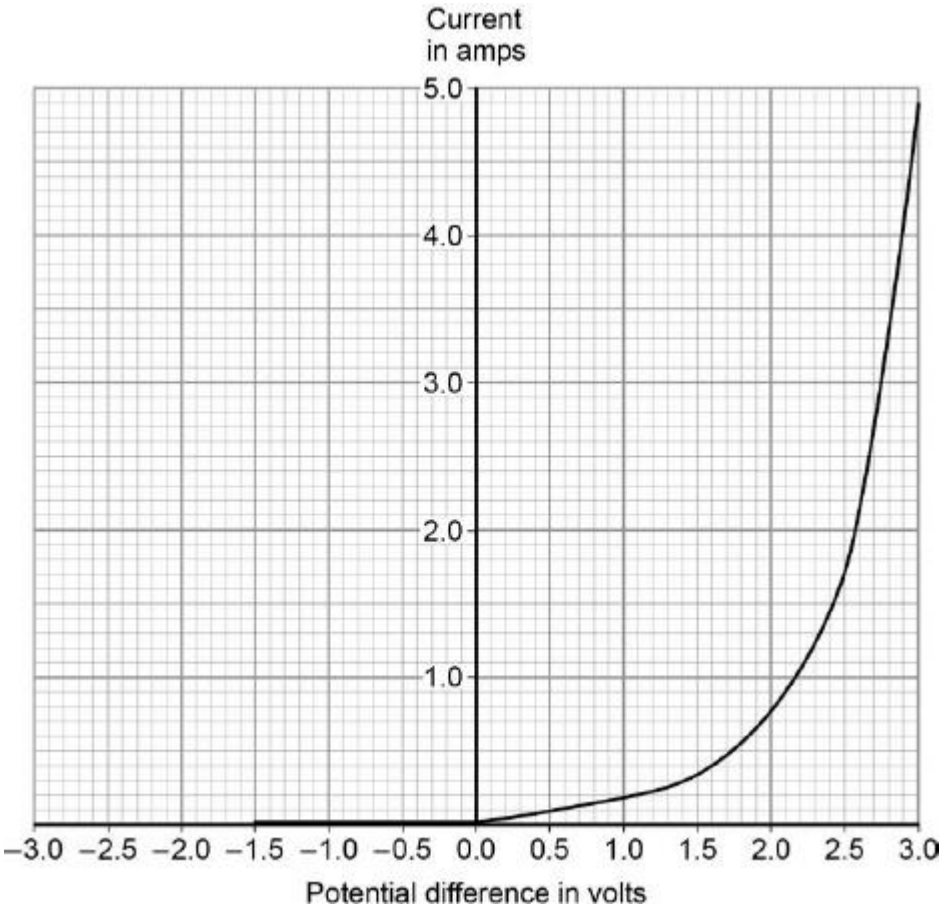

Explain how the student could know that the electrical component in the sealed box is **not** an ohmic conductor.

_____

_____

_____

_____

(2)

(c) What is the electrical component in the sealed box?

Explain your answer.

Component _____

Explanation _____

_____

_____

_____

(3)

(d) Use the graph to determine the resistance of the component at 2.3 V.

_____

_____

_____

_____

_____

_____

_____

Resistance = _____ Ω

(4)

(Total 13 marks)

Q8.

A student finds some information about energy-saving light bulbs.

(a) A 30W light bulb uses 600J of electrical energy in a certain period of time. In that time, it produces 450 J of light energy. The rest of the energy is wasted.

(i) Calculate the energy wasted by the light bulb in this period of time.

_____

Wasted energy = _____ J

(1)

(ii) What happens to the energy wasted by the light bulb?

_____

_____

(1)

(iii) Calculate the efficiency of this light bulb.

_____

_____

Efficiency = _____

(2)

(iv) Calculate the period of time, in seconds, during which the 600 J is provided to the 30 W light bulb.

_____

_____

Time = _____ s

(2)

(b) A company that makes light bulbs provides information about some of their products.

The table shows some of this information.

	Power in watts	Lifetime in hours	Cost of bulb in £
Filament bulb	60	1250	2.00
LED bulb	12	50 000	16.00

(i) Suggest why it is important to confirm this information independently.

_____

(1)

(ii) A homeowner is thinking about replacing his filament bulbs with LED bulbs.

A 12 W LED bulb gives the same light output as a 60 W filament bulb.

Suggest reasons why the homeowner is likely to choose LED bulbs.

Use the information given in the table.

_____

_____

_____

_____

(2)

(iii) State **one** factor, other than efficiency, that is important when considering the choice of a bulb for lighting in the home.

_____

_____

(1)

(Total 10 marks)

Q9.

(a) A resistor is a component that is used in an electric circuit.

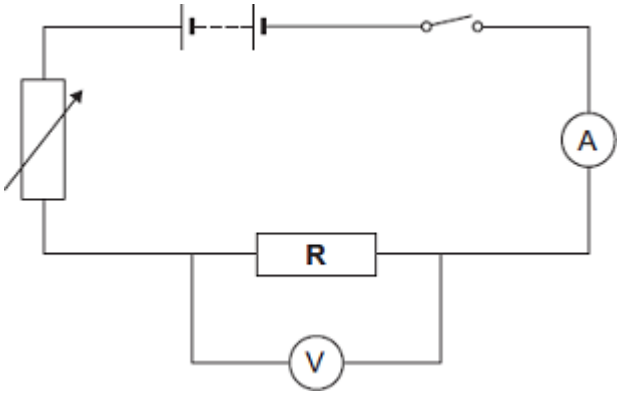

(i) Describe how a student would use the circuit to take the readings necessary to determine the resistance of resistor **R**.

_____

_____

_____

_____

_____

_____

_____

_____

_____

_____

_____

_____

_____

_____

(6)

(ii) Explain why the student should open the switch after each reading.

_____

_____

_____

_____

(2)

(iii) In an experiment using this circuit, an ammeter reading was 0.75 A.
The calculated value of the resistance of resistor **R** was 16 Ω.

What is the voltmeter reading?

_____

_____

Voltmeter reading = _____ V

(2)

(iv) The student told his teacher that the resistance of resistor **R** was 16 Ω.

The teacher explained that the resistors used could only have one of the following values of resistance.

10 Ω **12 Ω** **15 Ω** **18 Ω** **22 Ω**

Suggest which of these resistors the student had used in his experiment.

Give a reason for your answer.

_____

_____

_____

_____

(2)

(b) The diagram shows a fuse.

Describe the action of the fuse in a circuit.

_____

_____

_____

_____

_____

_____

_____

_____

(3)

(Total 15 marks)

Q10.

(a) The figure below shows a fridge with a freezer compartment.

The temperature of the air inside the freezer compartment is –5 °C.

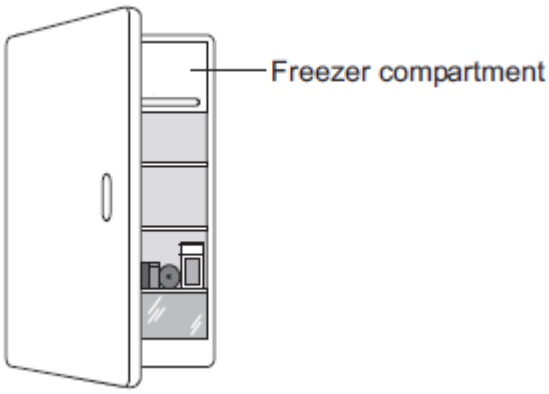

Use the correct answer from the box to complete each sentence.

Each answer may be used once, more than once or not at all.

decreased	unchanged	increased

When the air near the freezer compartment is cooled, the energy of the air particles is _____ .

The spaces between the air particles are _____ .

The density of the air is _____ .

(3)

(b) The table below shows some information about three fridges, **A**, **B** and **C**.

The efficiency of each fridge is the same.

Fridge	Volume in litres	Energy used in one year in kWh
A	232	292
B	382	409
C	622	524

(i) Which fridge, **A**, **B** or **C**, would cost the least to use for 1 year? ☐

Give **one** reason for your answer.

_____

_____

(2)

(ii) A householder looks at the data in the table above.

What should she conclude about the pattern linking the volume of the fridge and the energy it uses in one year?

_____

_____

(1)

(iii) The householder could not be certain that her conclusion is correct for all fridges.

Suggest **one** reason why not.

_____

_____

(1)

(Total 7 marks)

Q11.

Electricity can be generated using various energy sources.

(a) Give **one** advantage and **one** disadvantage of using nuclear power stations rather than gas-fired power stations to generate electricity.

Advantage _____

_____

Disadvantage _____

_____

(2)

(b) (i) A single wind turbine has a maximum power output of 2 000 000 W.

The wind turbine operated continuously at maximum power for 6 hours.

Calculate the energy output in kilowatt-hours of the wind turbine.

_____

_____

_____

Energy output = _____ kWh

(2)

(ii) Why, on average, do wind turbines operate at maximum power output for only 30% of the time?

_____

_____

(1)

(c) An on-shore wind farm is made up of many individual wind turbines.

They are connected to the National Grid using underground power cables.

Give **one** advantage of using underground power cables rather than overhead power cables.

_____

_____

(1)

(Total 6 marks)

Q12.

(a) Iceland is a country that generates nearly all of its electricity from renewable sources.

In 2013, about 80% of Iceland's electricity was generated using hydroelectric power stations (HEP).

Describe how electricity is generated in a hydroelectric power station. Include the useful energy transfers taking place.

_____

_____

_____

_____

_____

_____

_____

_____

_____

_____

_____

(4)

(b) The UK produces most of its electricity from fossil fuels.

Many people in the UK leave their televisions in ‘stand by’ mode when not in use, instead of switching them off.

It is better for the environment if people switch off their televisions, instead of leaving them in ‘stand by’ mode.

Explain why.

_____

_____

_____

_____

_____

_____

(3)

(c) A scientist wrote in a newspaper:

‘Appliances that do not automatically switch off when they are not being used should be banned.’

Suggest why scientists alone cannot make the decision to ban these appliances.

_____

_____

(1)

(Total 8 marks)

Q13.

Table 1 shows information about different light bulbs.

The bulbs all have the same brightness.

Table 1

Type of bulb	Input power in watts	Efficiency
Halogen	40	0.15
Compact fluorescent (CFL)	14	0.42
LED	7	0.85

(a) (i) Calculate the useful power output of the CFL bulb.

_____

_____

_____

Useful power output = _____ watts

(2)

(ii) Use your answer to part **(i)** to calculate the waste energy produced each second by a CFL bulb.

_____

Waste energy per second = _____ joules

(1)

(b) (i) A growth cabinet is used to investigate the effect of light on the rate of growth of plants.

The figure below shows a growth cabinet.

In the cabinet the factors that affect growth can be controlled.

A cooler unit is used to keep the temperature in the cabinet constant. The cooler unit is programmed to operate when the temperature rises above 20 °C.

The growth cabinet is lit using 50 halogen bulbs.

Changing from using halogen bulbs to LED bulbs would reduce the cost of running the growth cabinet.

Explain why.

_____

_____

_____

_____

_____

_____

(4)

(ii) A scientist measured the rate of growth of plants for different intensities of light.

What type of graph should be drawn to present the results?

_____

Give a reason for your answer.

_____

_____

(1)

(c) **Table 2** gives further information about both a halogen bulb and a LED bulb.

Table 2

Type of	Cost to	Lifetime in	Operating cost over the

bulb	buy	hours	lifetime of one bulb
Halogen	£1.50	2 000	£16.00
LED	£30.00	48 000	£67.20

A householder needs to replace a broken halogen light bulb.

Compare the cost efficiency of buying and using halogen bulbs rather than a LED bulb over a time span of 48 000 hours of use.

Your comparison must include calculations.

_____

_____

_____

_____

_____

_____

_____

_____

(4)

(Total 12 marks)

Q14.

(a) Draw **one** line from each circuit symbol to its correct name.

Circuit symbol	Name
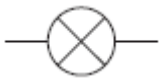	Diode
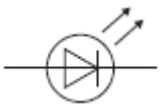	Light-dependent resistor (LDR)
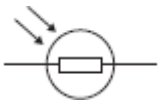	Lamp
	Light-emitting

diode (LED)

(3)

(b) **Figure 1** shows three circuits.

The resistors in the circuits are identical.

Each of the cells has a potential difference of 1.5 volts.

Figure 1

Circuit 1 **Circuit 2** **Circuit 3**

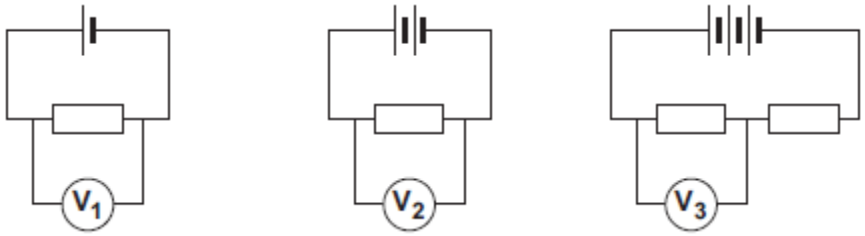

(i) Use the correct answer from the box to complete the sentence.

half	**twice**	**the same as**

The resistance of **circuit 1** is _____ the resistance of **circuit 3**.

(1)

(ii) Calculate the reading on voltmeter $\mathbf{V_2}$.

_____

Voltmeter reading $\mathbf{V_2}$ = _____ V

(1)

(iii) Which voltmeter, $\mathbf{V_1}$, $\mathbf{V_2}$ or $\mathbf{V_3}$, will give the lowest reading?

Draw a ring around the correct answer.

$\mathbf{V_1}$ $\mathbf{V_2}$ $\mathbf{V_3}$

(1)

(c) A student wanted to find out how the number of resistors affects the current in a series circuit.

Figure 2 shows the circuit used by the student.

Figure 2

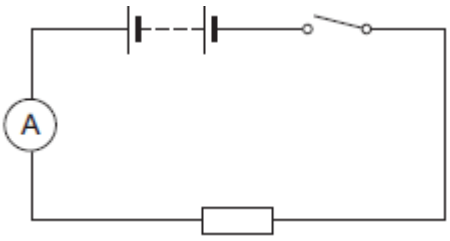

The student started with one resistor and then added more identical resistors to the circuit.

Each time a resistor was added, the student closed the switch and took the ammeter reading.

The student used a total of 4 resistors.

Figure 3 shows three of the results obtained by the student.

Figure 3

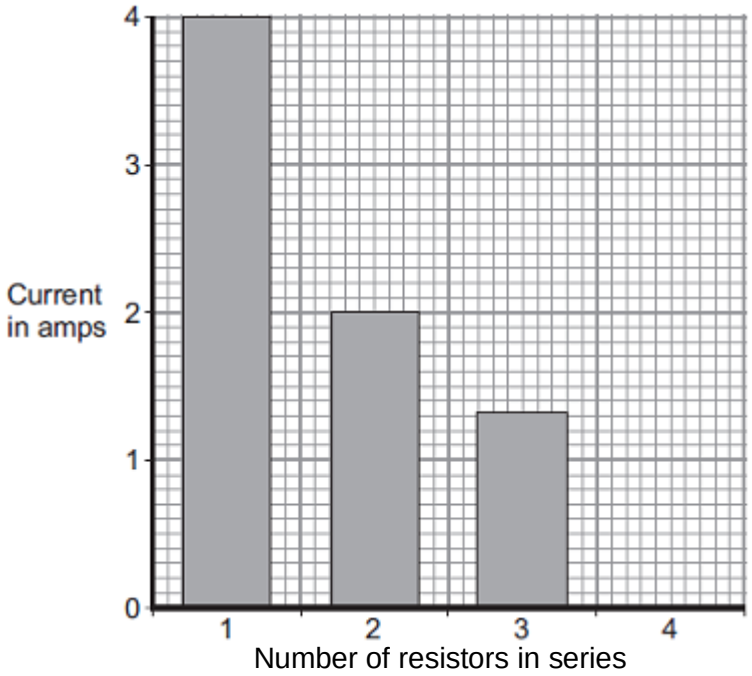

(i) To get valid results, the student kept one variable the same throughout the experiment.

Which variable did the student keep the same?

_____

(1)

(ii) The bar chart in **Figure 3** is not complete. The result using 4 resistors is not shown.

Complete the bar chart to show the current in the circuit when 4 resistors were used.

(2)

(iii) What conclusion should the student make from the bar chart?

_____

_____

(1)

(Total 10 marks)

Q15.

(a) **Figure 1** shows the inside of a three-pin plug and a length of three-core cable.

The cable is to be connected to the plug.

Figure 1

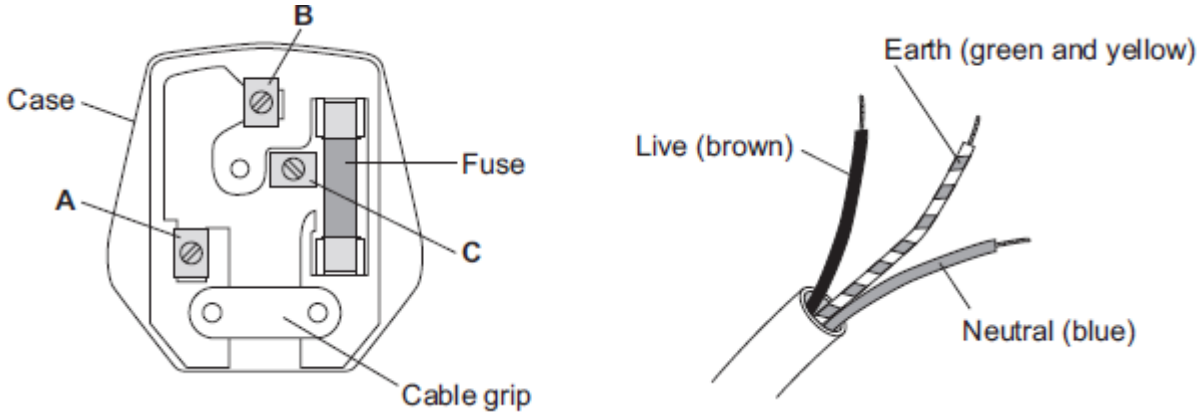

(i) Complete **Table 1** to show which plug terminal, **A**, **B** or **C**, connects to each of the wires inside the cable.

Table 1

Wire	**Plug terminal**
Live	
Neutral	
Earth	

(2)

(ii) Name a material that could be used to make the case of the plug.

_____

(1)

(b) **Figure 2** shows an electric drill and an extension lead. The drill is used with the extension lead.

Figure 2

Electric drill Extension lead

(i) The drill is used for 50 seconds.

In this time, 30 000 joules of energy are transferred from the mains electricity supply to the drill.

Calculate the power of the drill.

_____

_____

_____

Power = _____ W

(2)

(ii) A second drill is used with the extension lead. The power of this drill is 1200 W.

The instructions for using the extension lead include the following information.

> **When in use the lead may get hot:**
>
> **DO NOT go over the maximum power**
> - lead wound inside the case: 820 watts
> - lead fully unwound outside the case: 3100 watts

It would **not** be safe to use this drill with the extension lead if the lead was left wound inside the plastic case.

Explain why.

_____

_____

_____

_____

_____

_____

(3)

(c) **Table 2** gives information about three different electric drills.

Table 2

Drill	Power input in watts	Power output in watts
X	640	500
Y	710	500
Z	800	500

A person is going to buy **one** of the drills, **X**, **Y** or **Z**. The drills cost the same to buy.

Use only the information in the table to decide which **one** of the drills, **X**, **Y** or **Z**, the person should buy.

Write your answer in the box. ☐

Give a reason for your answer.

_____

_____

_____

(1)

(Total 9 marks)

Q16.

(a) **Figure 1** shows the apparatus used to obtain the data needed to calculate the resistance of a thermistor at different temperatures.

Figure 1

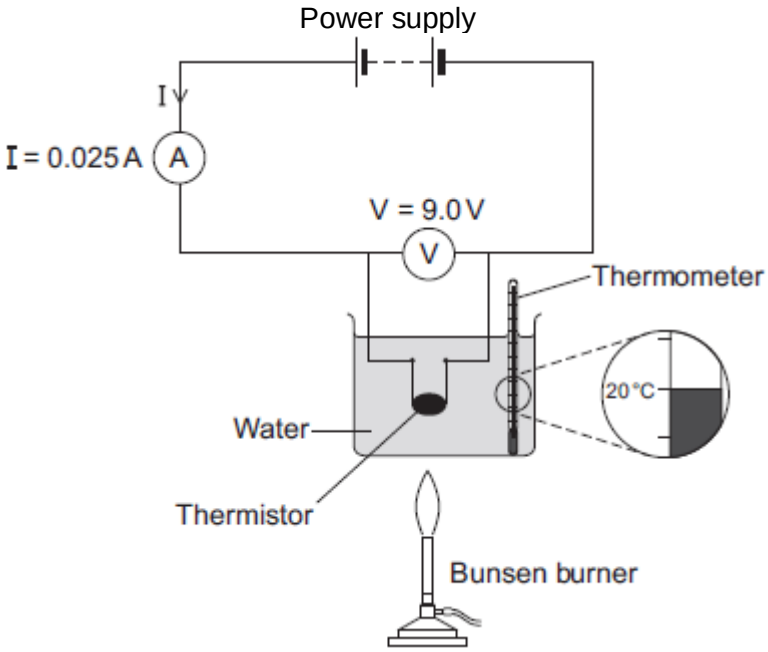

(i) In the box below, draw the circuit symbol for a thermistor.

☐

(1)

(ii) Use the data given in **Figure 1** to calculate the resistance of the thermistor at 20 °C.

_____

_____

_____

Resistance = _____ ohms

(2)

(iii) **Figure 2** shows the axes for a sketch graph.

Complete **Figure 2** to show how the resistance of the thermistor will change as the temperature of the thermistor increases from 20 °C to 100 °C.

Figure 2

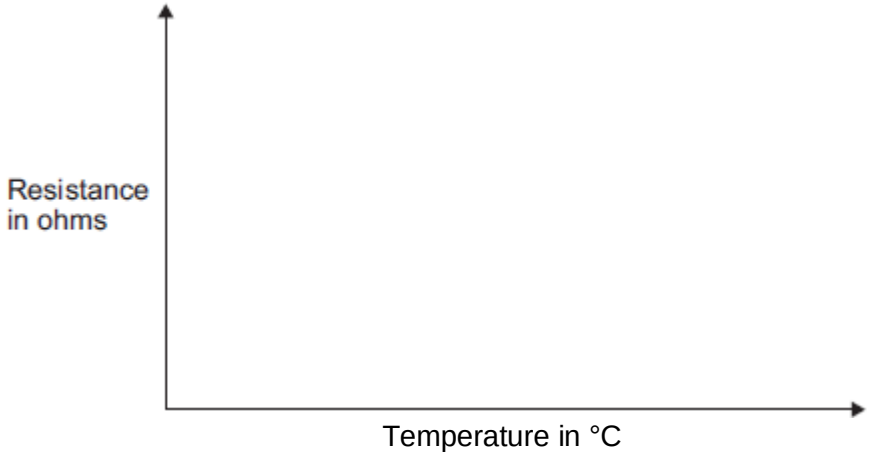

(1)

(iv) Which **one** of the following is most likely to include a thermistor?

Tick (✓) **one** box.

An automatic circuit to switch a plant watering system on and off. ☐

An automatic circuit to switch an outside light on when it gets dark. ☐

An automatic circuit to switch a heating system on and off. ☐

(1)

(b) The ammeter used in the circuit has a very low resistance.

Why is it important that ammeters have a very low resistance?

_____

_____

(1)

(c) The table below gives the temperature of boiling water using three different temperature scales.

Temperature	**Scale**
100	Celsius (°C)
212	Fahrenheit (°F)

80	Réaumur (°Re)

Scientists in different countries use the same temperature scale to measure temperature.

Suggest **one** advantage of doing this.

_____

_____

_____

(1)

(d) A student plans to investigate how the resistance of a light-dependent resistor (LDR) changes with light intensity.

The student starts with the apparatus shown in **Figure 2** but makes three changes to the apparatus.

One of the changes the student makes is to replace the thermistor with an LDR.

Describe what other changes the student should make to the apparatus.

_____

_____

_____

_____

(2)

(Total 9 marks)

Q17.

Solar panels are often seen on the roofs of houses.

(a) Describe the action and purpose of a solar panel.

_____

_____

_____

_____

(2)

(b) Photovoltaic cells transfer light energy to electrical energy.

In the UK, some householders have fitted modules containing photovoltaic cells on the roofs of their houses.

Four modules are shown in the diagram.

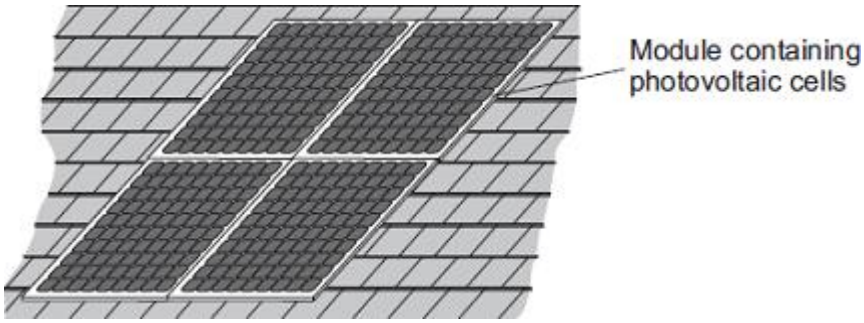

The electricity company pays the householder for the energy transferred.

The maximum power available from the photovoltaic cells shown in the diagram is 1.4×10^3 W.

How long, in minutes, does it take to transfer 168 kJ of energy?

_____

_____

_____

_____

_____

_____ Time = _____ minutes

(3)

(c) When the modules are fitted on a roof, the householder gets an extra electricity meter to measure the amount of energy transferred by the photovoltaic cells.

(i) The diagram shows two readings of this electricity meter taken three months apart.
The readings are in kilowatt-hours (kWh).

21 November	0	0	0	4	4
21 February	0	0	1	9	4

Calculate the energy transferred by the photovoltaic cells during this time period.

_____

Energy transferred = _____ kWh

(1)

(ii) The electricity company pays 40p for each kWh of energy transferred.

Calculate the money the electricity company would pay the householder.

_____

_____

Money paid = _____

(2)

(iii) The cost of the four modules is £6000.

Calculate the payback time in years for the modules.

_____

_____

Payback time = _____ years

(3)

(iv) State an assumption you have made in your calculation in part **(iii)**.

_____

_____

(1)

(d) In the northern hemisphere, the modules should always face south for the maximum transfer of energy.

State **one** other factor that would affect the amount of energy transferred during daylight hours.

_____

_____

(1)

(Total 13 marks)

Q18.

Electrical circuits have resistance.

(a) Draw a ring around the correct answer to complete the sentence.

When the resistance of a circuit increases, the current in the circuit

decreases.
increases.
stays the same.

(1)

(b) Use the correct answer from the box to complete each sentence.

a filament bulb	**an LED**	**an LDR**

An electrical component which has a resistance that increases as the temperature increases is _____ .

An electrical component which emits light only when a current flows through it in the forward direction is _____ .

(2)

(c) When some metals are heated the resistance of the metal changes.

The equipment for investigating how the resistance of a metal changes when it is heated is shown in the diagram.

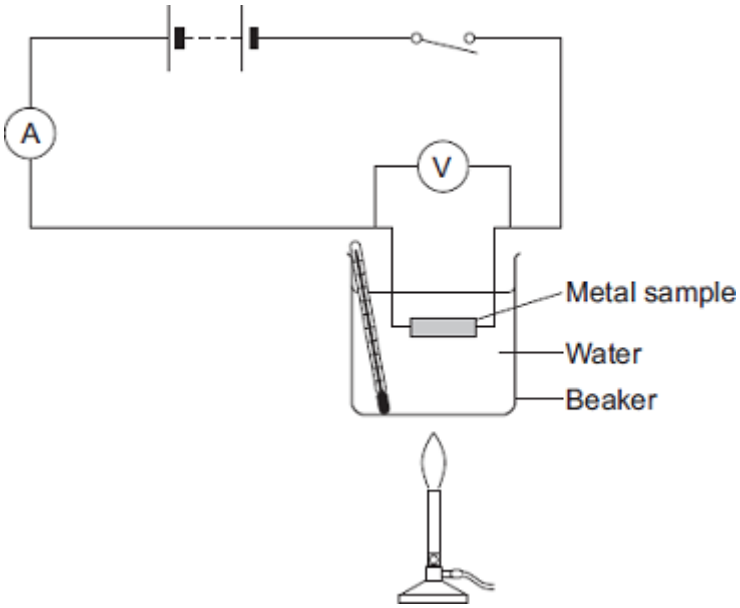

In this question you will be assessed on using good English, organising information clearly and using specialist terms where appropriate.

Describe an investigation a student could do to find how the resistance of a metal sample varies with temperature. The student uses the equipment shown.

Include in your answer:

- how the student should use the equipment
- the measurements the student should make
- how the student should use these measurements to determine the resistance
- how to make sure the results are valid.

_____

_____

_____

_____

_____

_____

_____

_____

_____

_____

(6)

(d) The table shows some data for samples of four metals **P**, **Q**, **R** and **S**.

The metal samples all had the same cross-sectional area and were the same length.

Metal sample	Resistance at 0°C in ohms	Resistance at 100°C in ohms
P	4.05	5.67
Q	2.65	3.48
R	6.0	9.17
S	1.70	2.23

A graph of the results for one of the metal samples is shown.

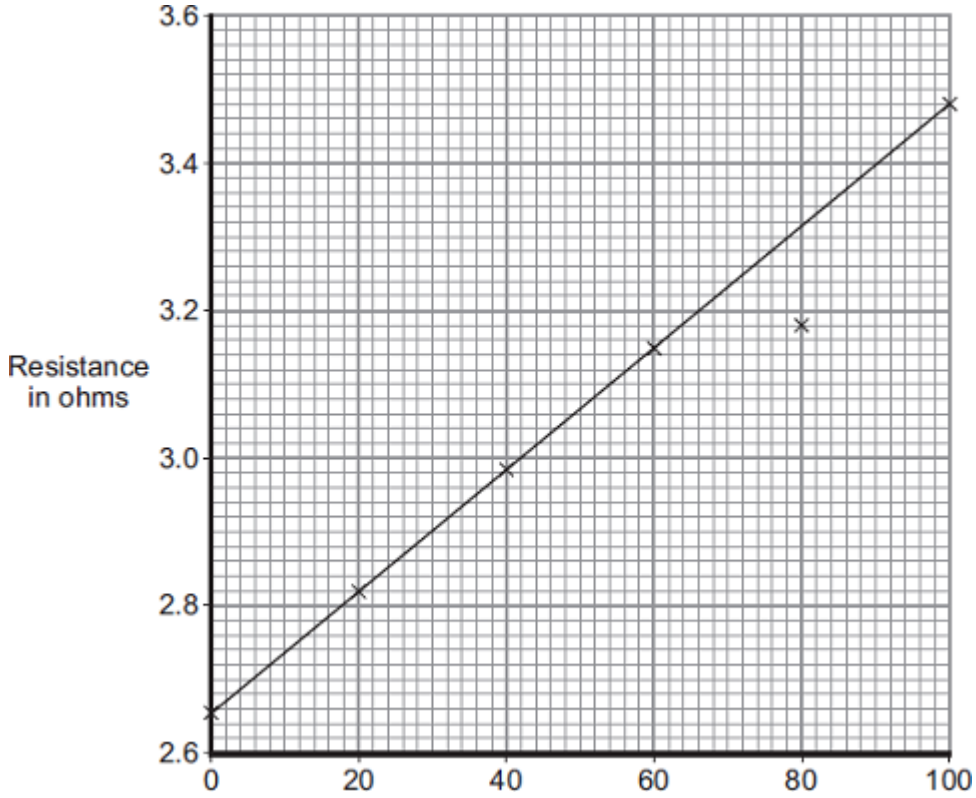

Temperature in °C

(i) Which metal sample, **P**, **Q**, **R** or **S**, has the data shown in the graph?

(1)

(ii) One of the results is anomalous. Circle this result on the graph.

(1)

(iii) Suggest a reason for the anomalous result.

_____

_____

(1)

(iv) The same equipment used in the investigation could be used as a thermometer known as a 'resistance thermometer.'

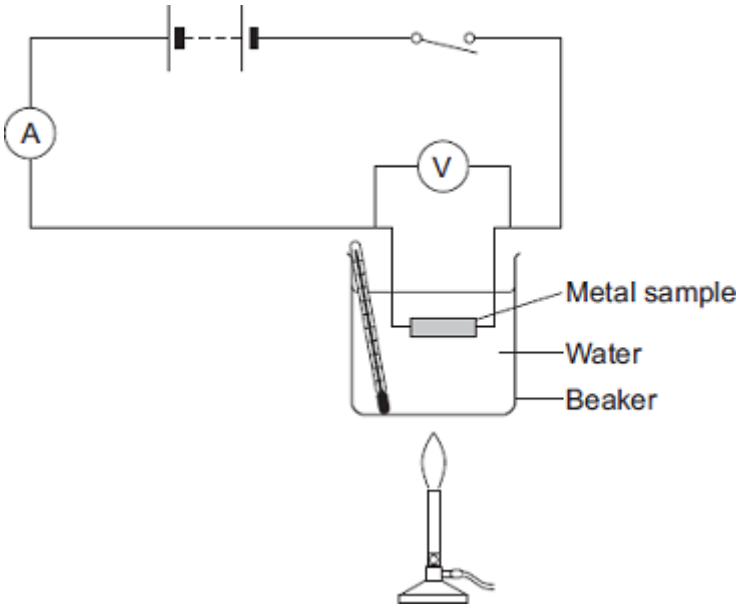

Suggest **two** disadvantages of using this equipment as a thermometer compared to a liquid-in-glass thermometer.

1. _____

_____

2. _____

_____

(2)

(Total 14 marks)

Q19.

(a) A student used the apparatus drawn below to investigate the heating effect of an electric heater.

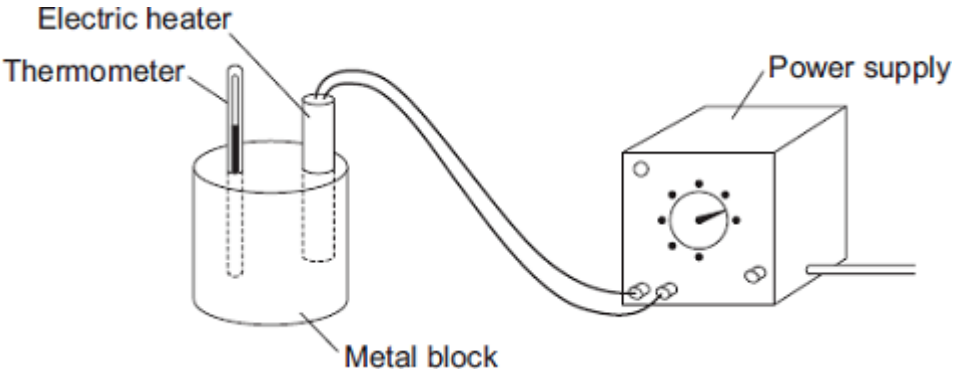

(i) Before starting the experiment, the student drew **Graph A**.

Graph A shows how the student expected the temperature of the metal block to change after the heater was switched on.

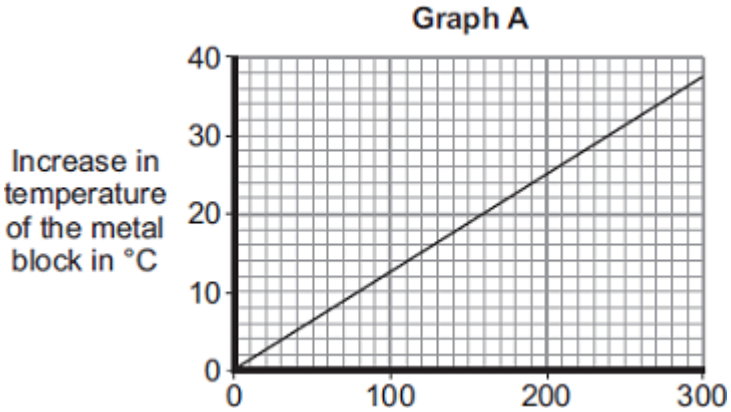

Describe the pattern shown in **Graph A**.

_____

_____

_____

_____

(2)

(ii) The student measured the room temperature. He then switched the heater on and measured the temperature of the metal block every 50 seconds.

The student calculated the increase in temperature of the metal block and plotted **Graph B**.

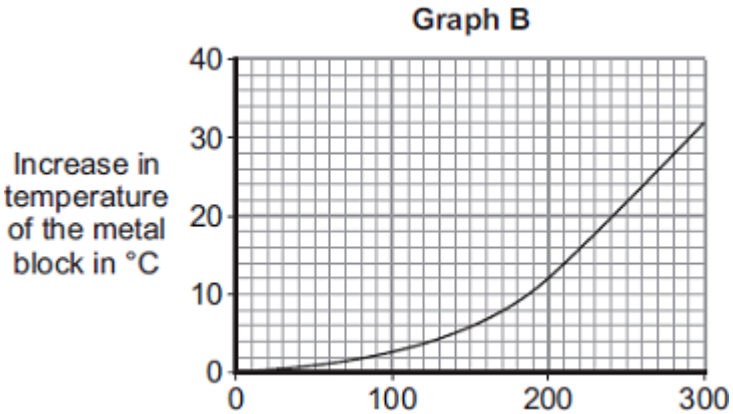

After 300 seconds, **Graph B** shows the increase in temperature of the metal block is lower than the increase in temperature expected from **Graph A**.

Suggest **one** reason why.

_____

_____

(1)

(iii) The power of the electric heater is 50 watts.

Calculate the energy transferred to the heater from the electricity supply in 300 seconds.

_____

_____

_____

Energy transferred = _____ J

(2)

(b) The student uses the same heater to heat blocks of different metals. Each time the heater is switched on for 300 seconds.

Each block of metal has the same mass but a different specific heat capacity.

Metal	**Specific heat capacity in J/kg°C**
Aluminium	900
Iron	450
Lead	130

Which **one** of the metals will heat up the most?

Draw a ring around the correct answer.

aluminium **iron** **lead**

Give, in terms of the amount of energy needed to heat the metal blocks, a reason for your answer.

_____

_____

_____

_____

(2)

(Total 7 marks)

Q20.

(a) The diagram shows the circuit used to obtain the data needed to plot the current–potential difference graph for a filament bulb.

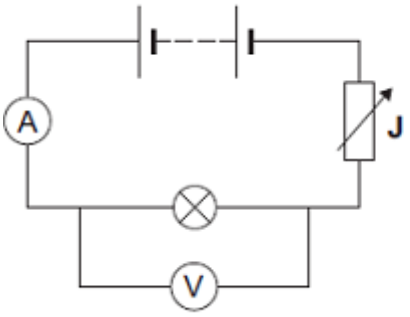

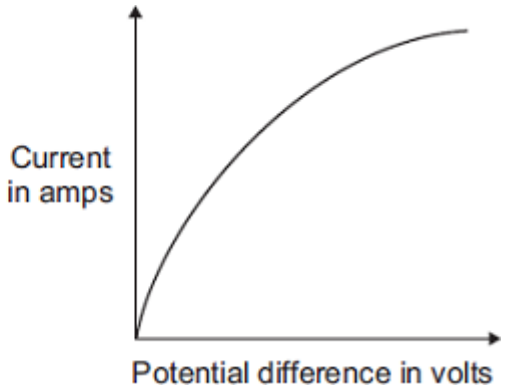

(i) Why is the component labelled '**J**' included in the circuit?

_____

_____

(1)

(ii) The resistance of the bulb increases as the potential difference across the bulb increases. Why?

_____

_____

(1)

(iii) The bulb is at full brightness when the potential difference across the bulb is 12 V.
The current through the bulb is then 3 A.

Calculate the power of the bulb when it is at full brightness and give the unit.

_____

_____

_____

Power = _____

(3)

(b) *In this question you will be assessed on using good English, organising information clearly and using specialist terms where appropriate.*

The table gives data about two types of light bulb people may use in their homes.

Type of light bulb	**Energy efficiency**	**Cost of one light bulb**	**Average lifetime in hours**
Halogen	10%	£1.95	2 000
Light Emitting Diode (LED)	32%	£11.70	36 000

Both types of light bulb produce the same amount of light.

Evaluate, in terms of cost and energy efficiency, the use of the two types of light bulb.

To gain full marks you must compare both types of light bulb and conclude which light bulb would be the best to use.

_____

_____

_____

_____

_____

_____

_____

_____

_____

(6)

(Total 11 marks)

Q21.

The picture shows an electric cooker hob. The simplified circuit diagram shows how the four heating elements connect to the mains electricity supply. The heating elements are identical.

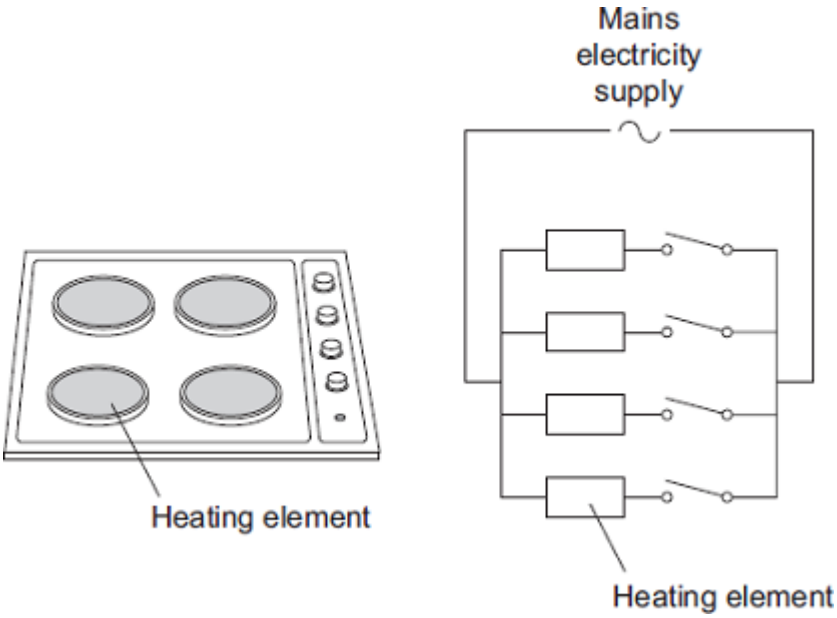

When all four heating elements are switched on at full power the hob draws a current of 26 A from the 230 V mains electricity supply.

(a) Calculate the resistance of one heating element when the hob is switched on at full power.

Give your answer to 2 significant figures.

_____

_____

_____

Resistance = _____ Ω

(3)

(b) The table gives the maximum current that can safely pass through copper wires of different cross-sectional area.

Cross-sectional area in mm^2	**Maximum safe current in amps**
1.0	**11.5**
2.5	**20.0**
4.0	**27.0**
6.0	**34.0**

The power sockets in a home are wired to the mains electricity supply using cables containing 2.5 mm^2 copper wires. Most electrical appliances are connected to the mains electricity supply by plugging them into a standard power socket.

It would **not** be safe to connect the electric cooker hob to the mains electricity supply by plugging it into a standard power socket.

Why?

_____

_____

_____

_____

(2)

(c) Mains electricity is an alternating current supply. Batteries supply a direct current.

What is the difference between an alternating current and a direct current?

_____

_____

_____

_____

(2)

(Total 7 marks)

Q22.

(a) Electrical circuits often contain resistors.

The diagram shows **two** resistors joined in series.

Calculate the total resistance of the **two** resistors.

_____

Total resistance = _____ Ω

(1)

(b) A circuit was set up as shown in the diagram. The three resistors are identical.

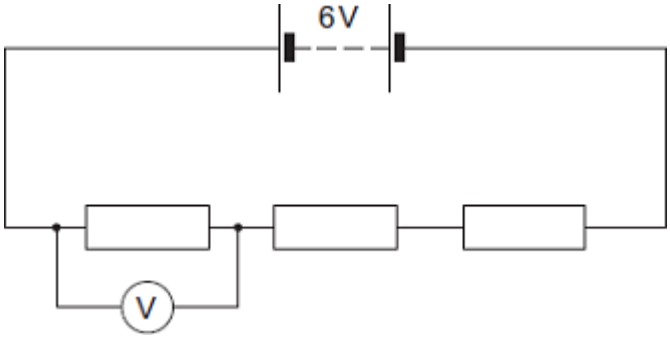

(i) Calculate the reading on the voltmeter.

_____

_____

Reading on voltmeter = _____ V

(2)

(ii) The same circuit has now been set up with two ammeters.

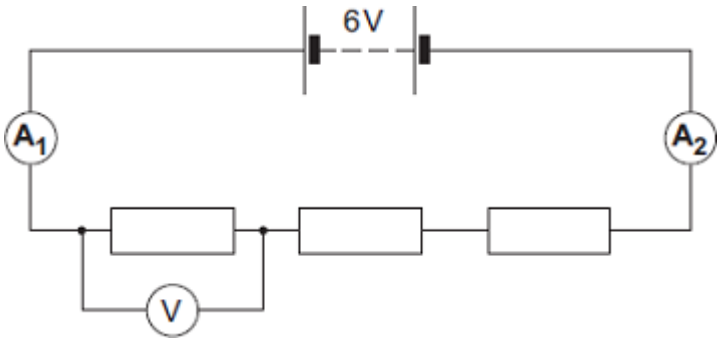

Draw a ring around the correct answer in the box to complete the sentence.

The reading on ammeter **A_2** will be

smaller than
equal to
greater than

the reading on ammeter **A_1**.

(1)

(Total 4 marks)

Q23.

(a) The diagram shows the information plate on an electric kettle. The kettle is plugged into the a.c. mains electricity supply.

230 V	**2760 W**
50 Hz	

Use the information from the plate to answer the following questions.

(i) What is the frequency of the a.c. mains electricity supply?

_____

(1)

(ii) What is the power of the electric kettle?

_____

(1)

(b) To boil the water in the kettle, 2400 coulombs of charge pass through the heating element in 200 seconds.

Calculate the current flowing through the heating element and give the unit.

Choose the unit from the list below.

amps **volts** **watts**

_____

_____

_____

Current = _____

(3)

(c) The amount of charge passing through the heating element of an electric kettle depends on the time the kettle is switched on.

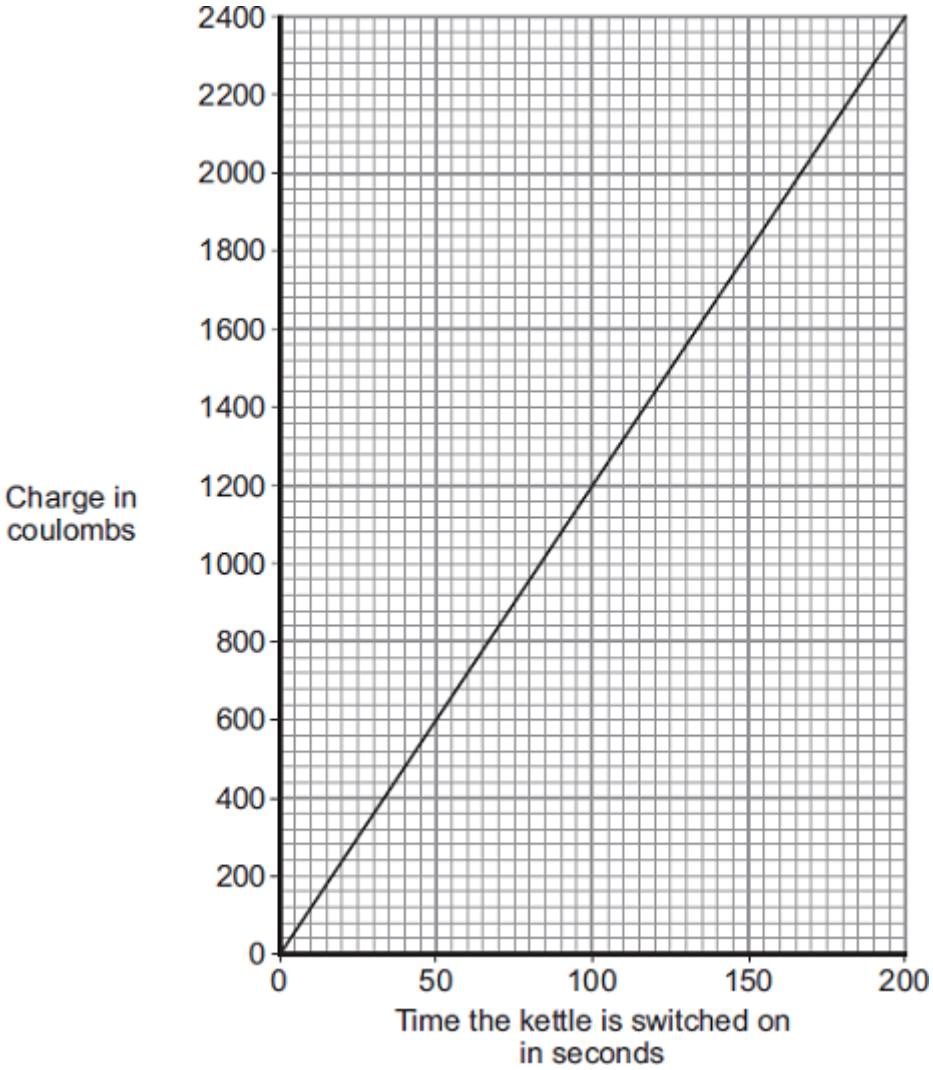

What pattern links the amount of charge passing through the heating element and the time the kettle is switched on?

_____

_____

(2)
(Total 7 marks)

Q24.

(a) A student set up the circuit shown in the diagram. The student uses the circuit to obtain the data needed to plot a current - potential difference graph for a diode.

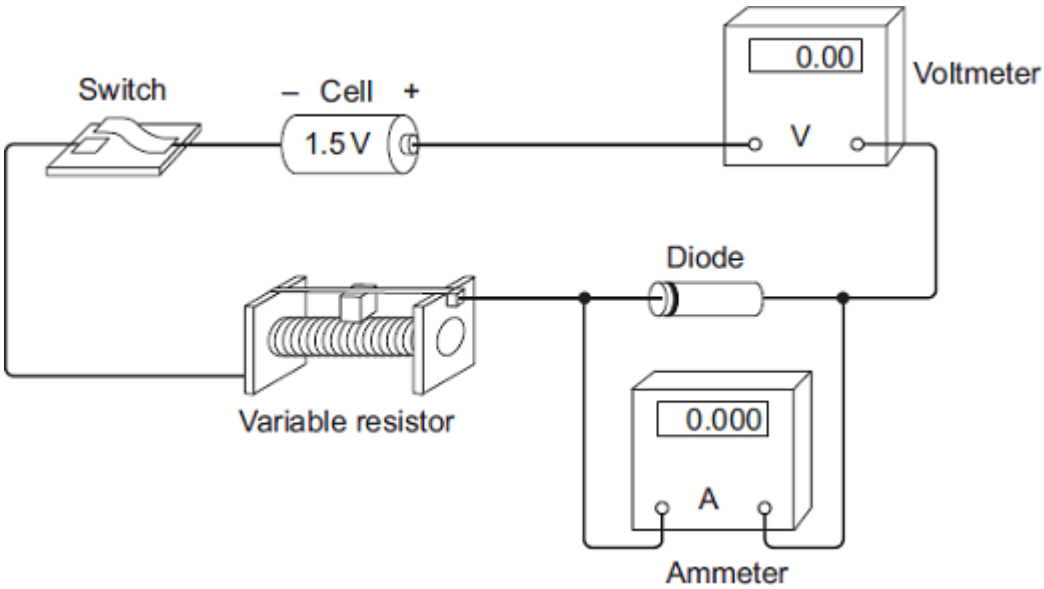

(i) Draw, in the boxes, the circuit symbol for a diode and the circuit symbol for a variable resistor.

Diode	**Variable resistor**

(2)

(ii) The student made two mistakes when setting up the circuit.

What **two** mistakes did the student make?

1. _____

_____

2. _____

_____

(2)

(b) After correcting the circuit, the student obtained a set of data and plotted the graph below.

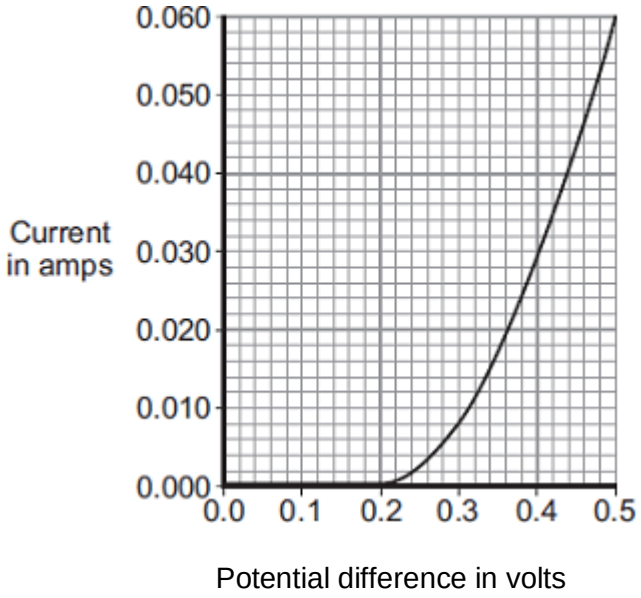

(i) At what potential difference did the diode start to conduct an electric current?

_____ V

(1)

(ii) Use data from the graph to calculate the resistance of the diode when the potential difference across the diode is 0.3 V.

_____

_____

_____

Resistance = _____ ohms

(3)

(c) The diagram shows the trace produced by an alternating current (a.c.) supply on an oscilloscope.

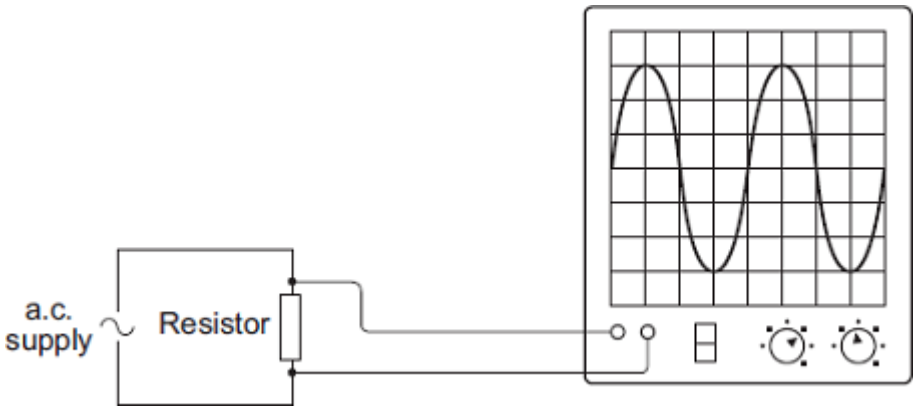

Each horizontal division on the oscilloscope screen represents a time of 0.01s.

(i) Calculate the frequency of the a.c. supply.

_____

_____

_____

Frequency = _____ hertz

(2)

(ii) A diode is now connected in series with the a.c. power supply.

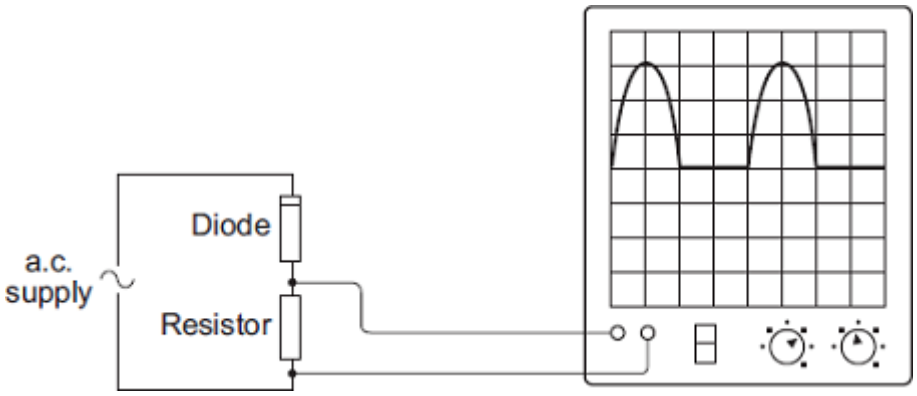

Why does the diode cause the trace on the oscilloscope screen to change?

_____

_____

_____

_____

(2)

(Total 12 marks)

Q25.

The pictures show six different household appliances.

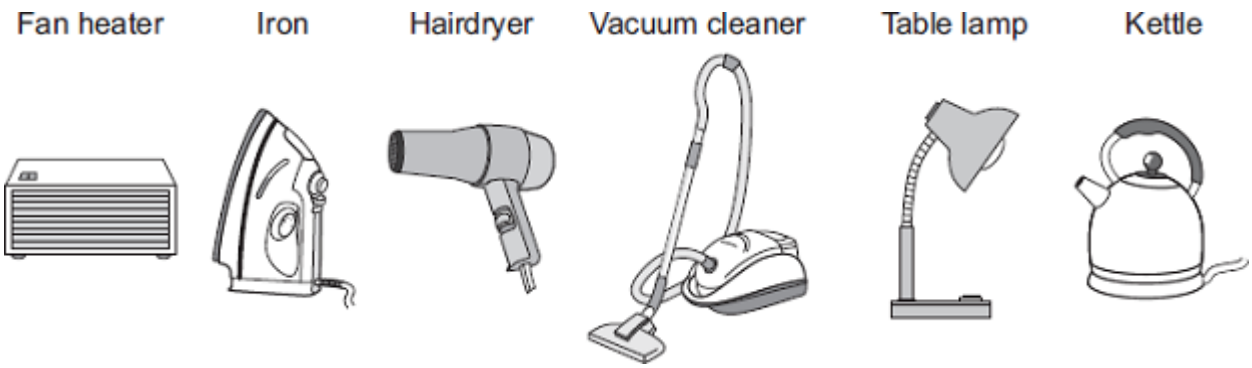

(a) Four of the appliances, including the fan heater, are designed to transform electrical energy into heat.

Name the other **three** appliances designed to transform electrical energy into heat.

1. _____

2. _____

3 _____

(3)

(b) The bar chart shows the power of three electric kettles, **X**, **Y** and **Z**.

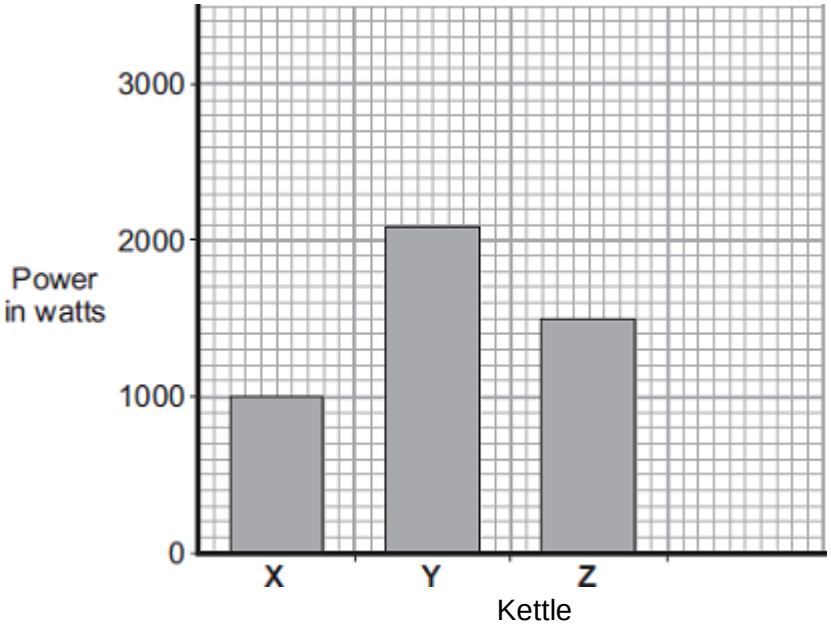

(i) In one week, each kettle is used for a total of 30 minutes.

Which kettle costs the most to use?

Put a tick (✓) next to your answer.

X ☐

Y ☐

Z ☐

(1)

(ii) A new 'express boil' kettle boils water faster than any other kettle.

Draw a fourth bar on the chart to show the possible power of an 'express boil' kettle.

(1)

(c) The graph shows how the time to boil water in an electric kettle depends on the volume of water in the kettle.

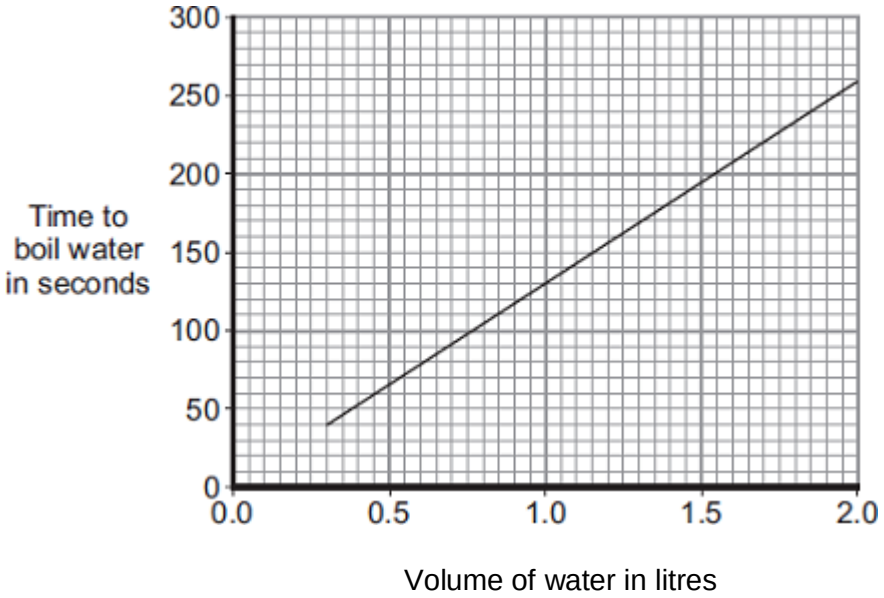

A householder always fills the electric kettle to the top, even when only enough boiling water for one small cup of coffee is wanted.

Explain how the householder is wasting money.

_____

_____

_____

_____

_____

_____

(3)

(Total 8 marks)

Q26.

A householder was out shopping when her electricity meter reading should have been taken. The electricity company estimated the reading and sent the following bill. Unfortunately, the bill was damaged in the post.

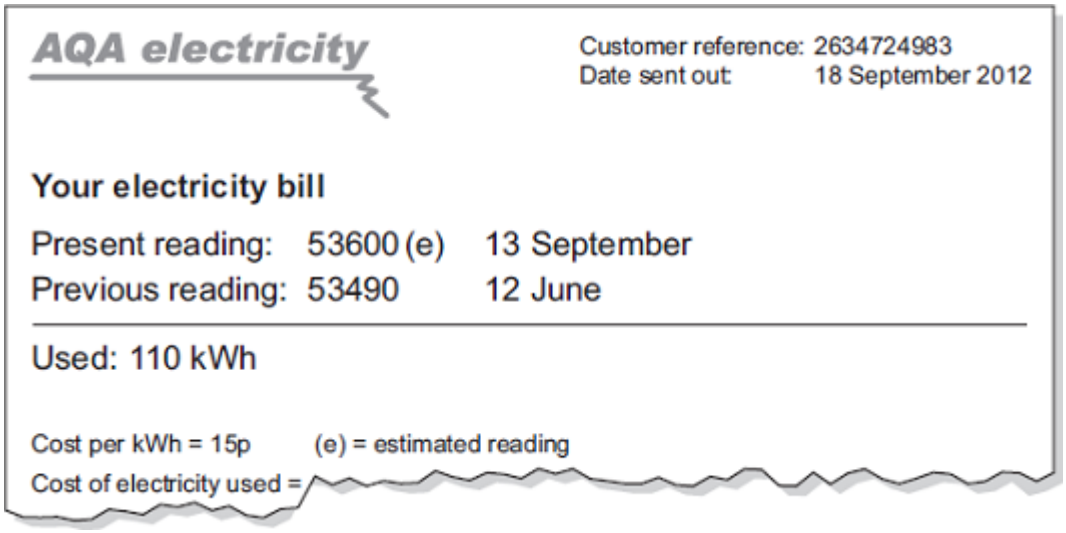

AQA electricity

Customer reference: 2634724983
Date sent out: 18 September 2012

Your electricity bill

Present reading:	53600 (e)	13 September
Previous reading:	53490	12 June

Used: 110 kWh

Cost per kWh = 15p (e) = estimated reading

Cost of electricity used =

(a) Use the equation in the box to calculate the cost of the electricity used between 12 June and 13 September.

total cost = number of kilowatt-hours x cost per kilowatt-hour

Show clearly how you work out your answer.

_____

_____

Total cost = _____

(2)

(b) The estimated reading shown on the bill was not very accurate. The correct reading was 53782.

How many kilowatt-hours of electricity had the householder actually used between 12 June and 13 September?

_____

_____

(2)

(Total 4 marks)

Q27.

The picture shows a washing machine. When the door is closed and the machine switched on, an electric motor rotates the drum and washing.

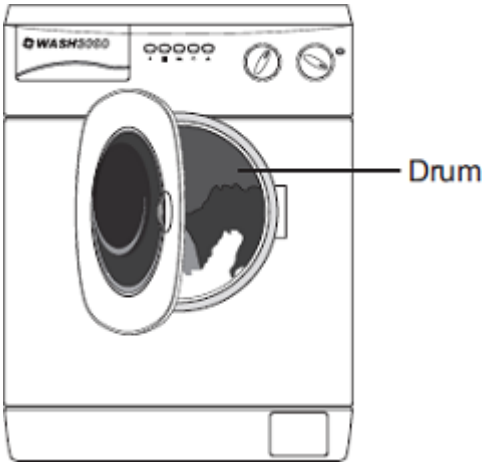

(a) Complete the following sentences.

(i) An electric motor is designed to transform electrical energy into

_____ energy.

(1)

(ii) Some of the electrical energy supplied to the motor is wasted as

_____ energy and _____ energy.

(1)

(b) What happens to the energy wasted by the electric motor?

_____

_____

(1)

(c) The graph shows that washing clothes at a lower temperature uses less energy than washing them at a higher temperature. Using less energy will save money.

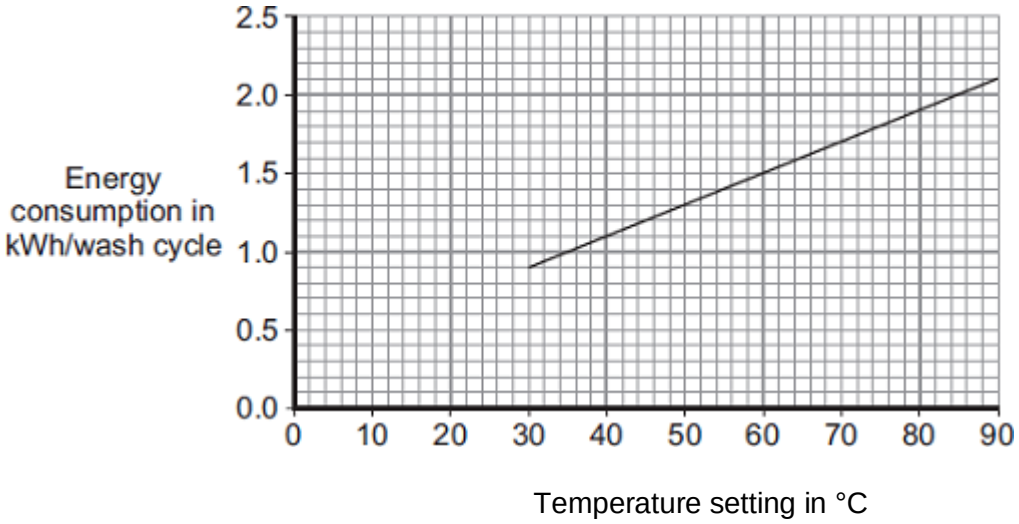

(i) Electricity costs 15p per kilowatt-hour (kWh).

The temperature setting is turned down from 40 °C to 30 °C.

Use the graph and equation in the box to calculate the money saved each wash cycle.

total cost = number of kilowatt-hours x cost per kilowatt-hour

Show clearly how you work out your answer.

_____

_____

Money saved = _____

(2)

(ii) Reducing the amount of energy used by washing machines could reduce the amount of carbon dioxide emitted into the atmosphere.

Explain why.

_____

_____

_____

_____

(2)

(Total 7 marks)

Q28.

(a) The diagram shows the inside of an incorrectly wired three-pin plug.

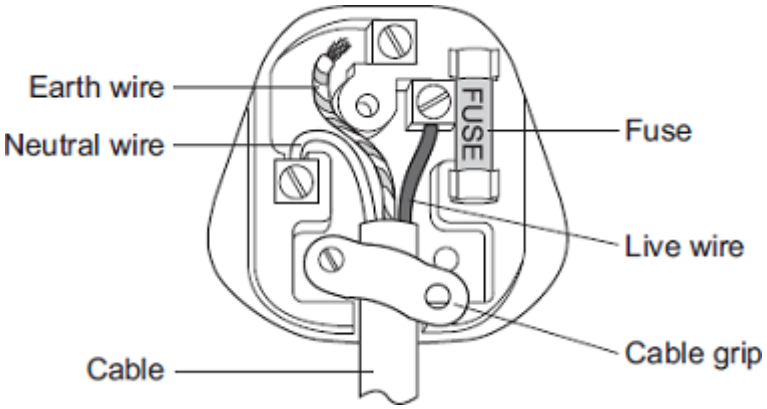

(i) What **two** changes need to be made so that the plug is wired correctly?

1. _____

_____

2. _____

_____

(2)

(ii) The fuse inside a plug is a safety device.

Explain what happens when too much current passes through a fuse.

_____

_____

_____

_____

(2)

(b) Each of these pictures shows an electrical appliance being used in a bathroom.

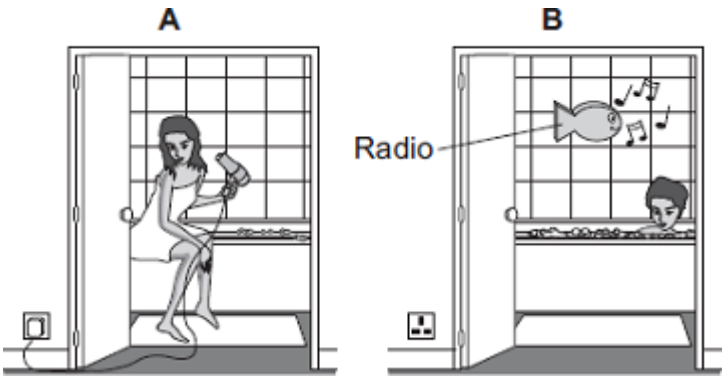

Using the hairdryer in picture **A** is dangerous. However, it is safe to use the battery-operated radio in picture **B**.

Explain why.

_____

_____

_____

_____

(2)

(Total 6 marks)

Q29.

(a) The diagram shows the circuit used to investigate the resistance of a sample of a material.
The diagram is not complete; the ammeter and voltmeter are missing.

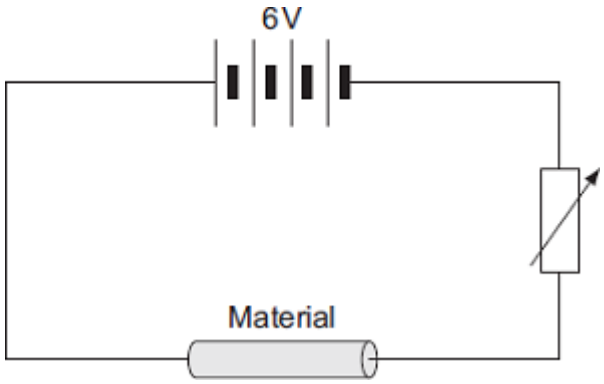

(i) Draw the symbols for the ammeter and voltmeter on the diagram in the correct places.

(2)

(ii) How can the current through the material be changed?

_____

_____

(1)

(b) The material, called conducting putty, is rolled into cylinders of different lengths but with equal thickness.

Graph 1 shows how the resistance changes with length.

Graph 1

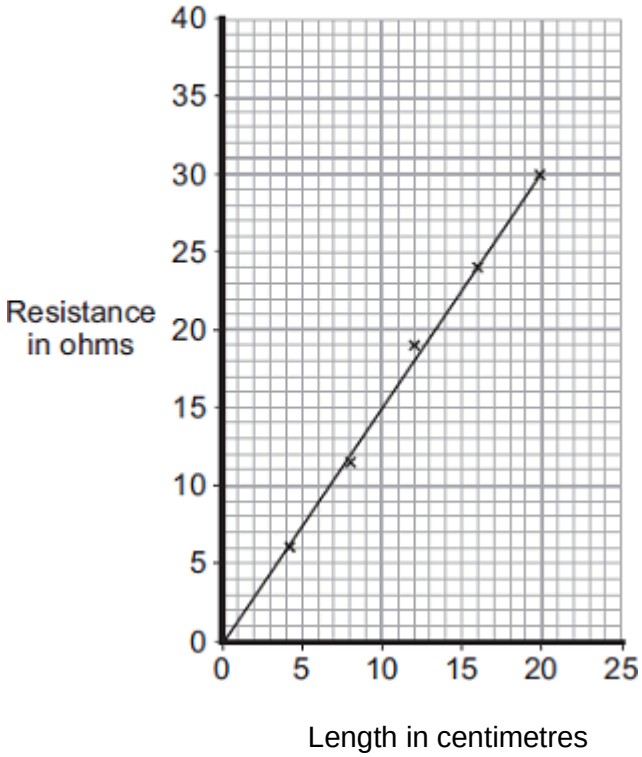

(i) The current through a 25 cm length of conducting putty was 0.15 A.

Use **Graph 1** to find the resistance of a 25 cm length of conducting putty.

Resistance = _____ ohms

(1)

(ii) Use your answer to **(b) (i)** to calculate the potential difference across a 25 cm length of conducting putty.

Show clearly how you work out your answer.

_____

_____

_____

Potential difference = _____ volts

(2)

(c) A second set of data was obtained using thicker pieces of conducting putty. Both sets of results are shown in **Graph 2**.

Graph 2

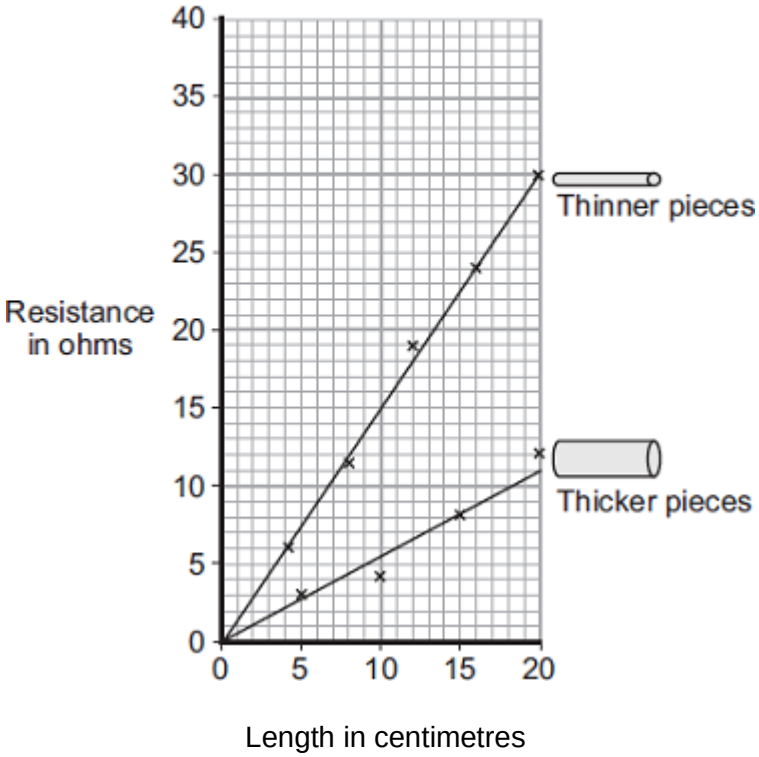

(i) What is the relationship between the resistance and the thickness of the conducting putty?

_____

_____

(1)

(ii) Name **one** error that may have reduced the accuracy of the results.

_____

(1)

(Total 8 marks)

Q30.

(a) Describe the difference between an alternating current (a.c.) and a direct current (d.c.).

_____

_____

_____

_____

(2)

(b) The diagram shows how the electric supply cable is connected to an electric kettle. The earth wire is connected to the metal case of the kettle.

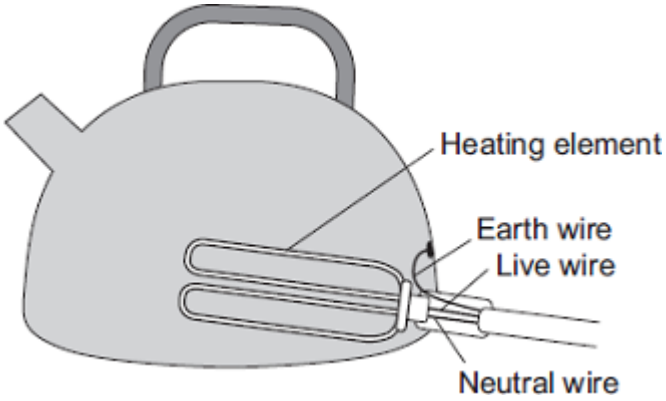

If a fault makes the metal case live, the earth wire and the fuse inside the plug protect anyone using the kettle from an electric shock.

Explain how.

_____

_____

_____

_____

(2)
(Total 4 marks)

Q31.

The diagram shows how one type of electric storage heater is constructed. The heater has ceramic bricks inside. The electric elements heat the ceramic bricks during the night. Later, during the daytime, the ceramic bricks transfer the stored energy to the room.

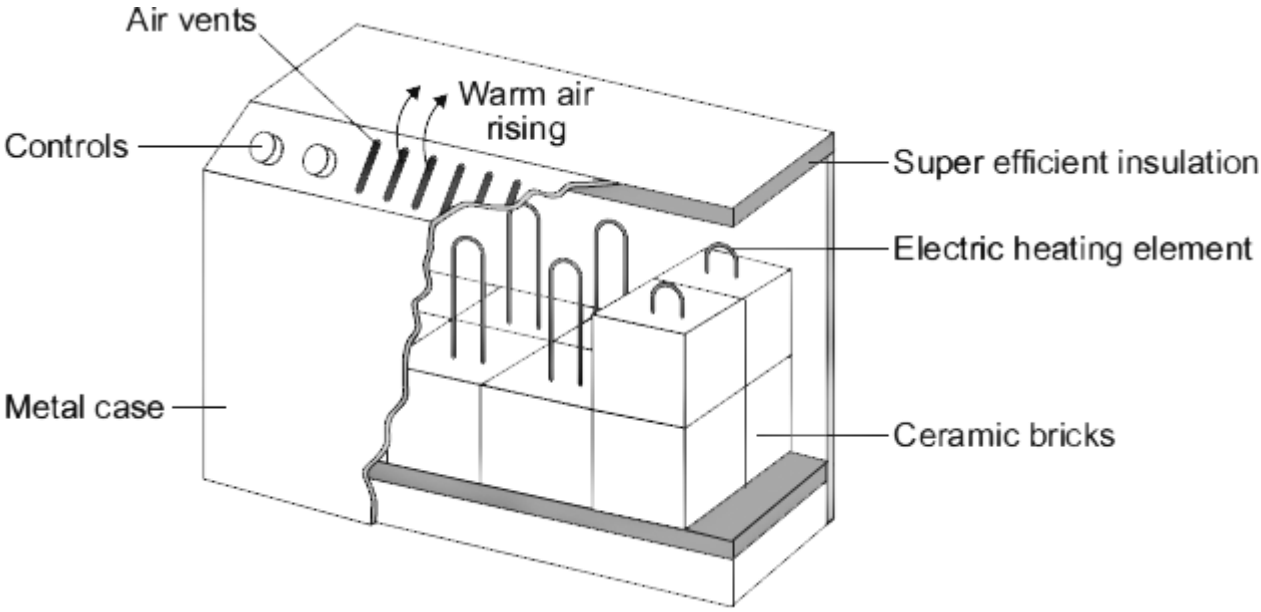

(a) (i) Complete the following sentences using words from the box.

conduction	**convection**	**evaporation**

Energy is transferred through the metal casing by _____

The warm air rising from the heater transfers energy to the

room by _____

(2)

(ii) The inside of the metal case is insulated.

Which **one** of the following gives the reason why?

Tick (✓) **one** box.

To transfer energy from the ceramic bricks to the room faster	☐
To stop energy from the room transferring into the heater	☐
To keep the ceramic bricks hot for a longer time	☐

(1)

(b) In winter, the electricity supply to a 2.6 kW storage heater is switched on for seven hours each day.

(i) Calculate the energy transferred, in kilowatt-hours, from the electricity supply to the heater in seven hours.

Show clearly how you work out your answer.

_____

_____

Energy transferred = _____ kWh

(2)

(ii) The electricity supply to the heater is always switched on between midnight and 7 am. Between these hours, electricity costs 5 p per kilowatt-hour.

Calculate how much it costs to have the heater switched on between midnight and 7 am.

_____

_____

Cost = _____ p

(1)

(c) Between 7 am and 8 am, after the electricity supply is switched off, the temperature of the ceramic bricks falls by 25 °C.

Calculate the energy transferred from the ceramic bricks between 7 am and 8 am.

Total mass of ceramic bricks = 120 kg.
Specific heat capacity of the ceramic bricks = 750 J/kg °C.

Show clearly how you work out your answer.

_____

_____

_____

_____

Energy transferred = _____ J

(2)

(Total 8 marks)

Q32.

The diagram shows how one type of electric storage heater is constructed. The heater has ceramic bricks inside. The electric elements heat the ceramic bricks during the night. Later, during the daytime, the ceramic bricks transfer the stored energy to the room.

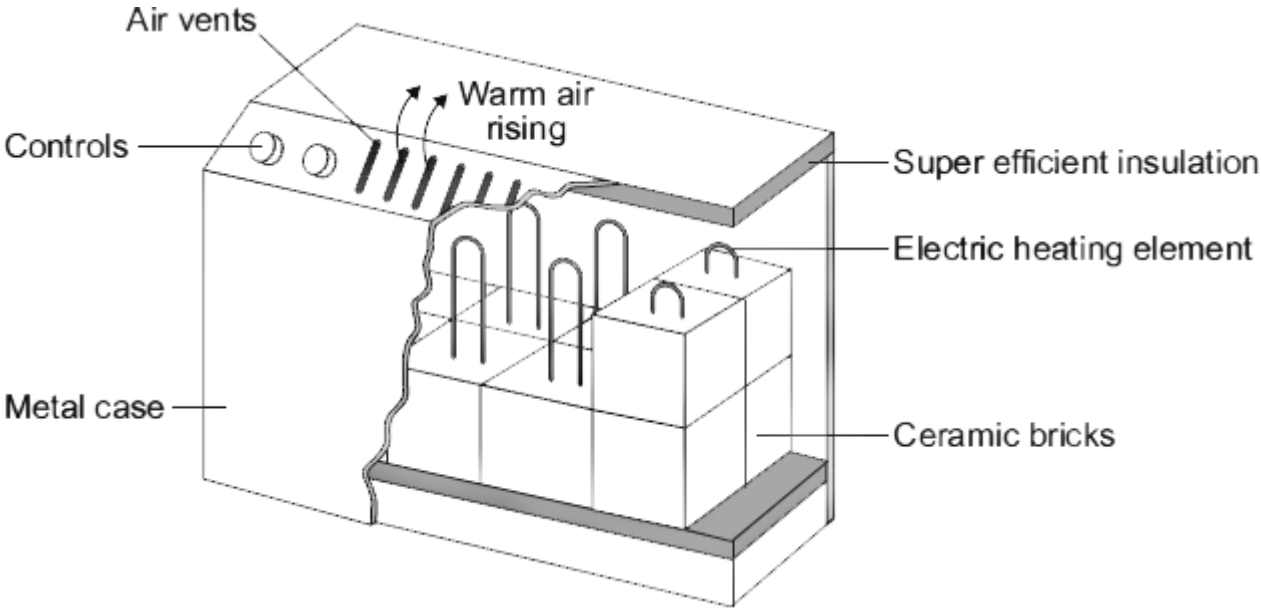

(a) In winter, the electricity supply to a 2.6 kW storage heater is switched on each day between midnight and 7 am. Between these hours, electricity costs 5 p per kilowatt-hour.

Calculate the daily cost of using the storage heater.

Show clearly how you work out your answer.

_____

_____

_____

_____

_____

Cost = _____ p

(3)

(b) Homes with electric storage heaters have a separate meter to measure the electricity supplied between midnight and 7 am. Another meter measures the electricity supplied at other times. This electricity supplied at other times costs 15 p per kilowatt-hour.

Electricity companies encourage people to use electricity between midnight and 7 am by selling the electricity at a lower cost.

Suggest why.

_____

_____

(1)

(c) By 7 am, the temperature at the centre of the ceramic bricks is about 800 °C. The temperature of the outside metal casing is about 80 °C.

The ceramic bricks are surrounded by 'super-efficient' insulation.

Explain why.

_____

_____

_____

_____

(2)

(d) At 7 am, the electricity supply switches off and the temperature of the ceramic bricks starts to fall. The temperature of the bricks falls by 100 °C over the next four hours. During this time, 9 000 000 J of energy are transferred from the bricks.

Calculate the total mass of ceramic bricks inside the heater.

Specific heat capacity of the ceramic bricks = 750 J/kg °C.

Show clearly how you work out your answer.

_____

_____

_____

_____

Mass = _____ kg

(2)

(Total 8 marks)

Q33.

The table gives data about two types of low energy bulb.

Type of bulb	Power input	Efficiency	Lifetime	Cost of

	in watts		in hours	one bulb
Compact Fluorescent Lamp (CFL)	8	20%	10 000	£3.10
Light Emitting Diode (LED)	5		50 000	£29.85

(a) Both types of bulb produce the same useful power output.

(i) Calculate the useful power output of the CFL.

Show clearly how you work out your answer.

_____

_____

_____

Useful power output = _____ W

(2)

(ii) Calculate the efficiency of the LED bulb.

Show clearly how you work out your answer.

_____

_____

_____

Efficiency = _____

(1)

(b) LED bulbs are expensive. This is because of the large number of individual electronic LED chips needed to produce sufficient light from each bulb.

(i) Use the data in the table to evaluate the cost-effectiveness of an LED bulb compared to a CFL.

_____

_____

_____

_____

(2)

(ii) Scientists are developing brighter and more efficient LED chips than those currently used in LED bulbs.

Suggest **one** benefit of developing brighter and more efficient LED chips.

_____

_____

(1)
(Total 6 marks)

Q34.

The data included in the diagrams gives the power of the electrical appliances.

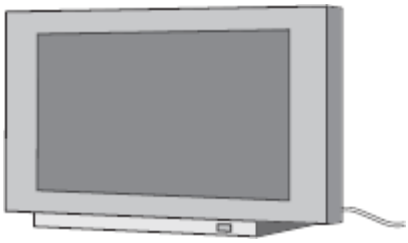

TV
160 W

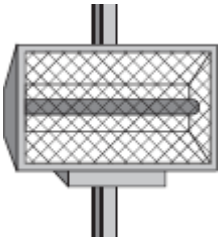

Radiant heater
1.0 kW

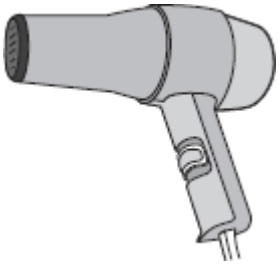

Hairdryer
1100 W

Sandwich toaster
1.1 kW

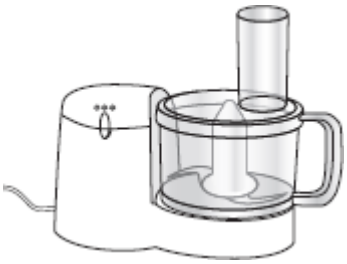

Food processor
0.4 kW

Table lamp
40 W

(a) (i) Which appliance is designed to transform electrical energy to light and sound?

_____

(1)

(ii) Which **two** appliances transform energy at the same rate?

_____ and _____

(1)

(b) During one week, the food processor is used for a total of 3 hours.

(i) Use the equation in the box to calculate the energy transferred, in kilowatt-hours, by the food processor in 3 hours.

energy transferred (kilowatt-hour, kWh)	=	power (kilowatt, kW)	×	time (hour, h)

Show clearly how you work out your answer.

_____

_____

_____

_____

Energy transferred = _____ kWh

(2)

(ii) Electricity costs 15 pence per kilowatt-hour.

Use the equation in the box to calculate the cost of using the food processor for 3 hours.

total cost = number of kilowatt-hours × cost per kilowatt-hour

Show clearly how you work out your answer.

_____

_____

_____

_____

Cost = _____ pence

(2)

(Total 6 marks)

Q35.

The data included in the diagrams gives the power of the electrical appliances.

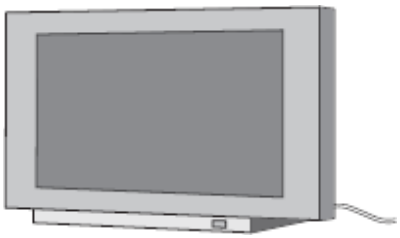

TV
160 W

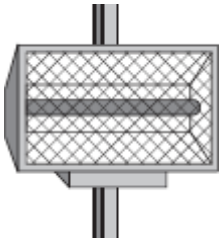

Radiant heater
1.0 kW

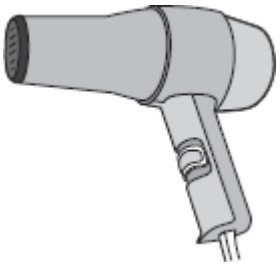

Hairdryer
1100 W

Sandwich toaster
1.1 kW

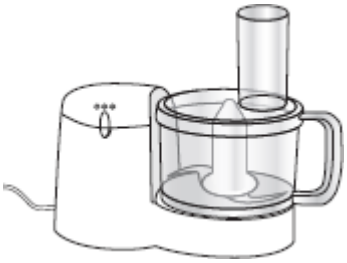

Food processor
0.4 kW

Table lamp
40 W

(a) (i) Which of the appliances are designed to transform electrical energy to kinetic energy?

_____

_____

(1)

(ii) Which of the appliances waste energy as heat?

_____

_____

(1)

(b) Leaving the radiant heater switched on is likely to lead to more carbon dioxide being emitted into the atmosphere than leaving the table lamp on for the same length of time.

Explain why.

_____

_____

_____

_____

(2)

(c) A homeowner decides to monitor the amount of electrical energy used in his home. He can do this by using the home's electricity meter or by using a separate electronic device.

The table gives some information about each method.

Electricity meter	**Electronic device**
Records to the nearest kilowatt-hour	Records to the nearest 1/100th kilowatt-hour
Homeowner takes readings at regular intervals	Energy use recorded continuously and stored for one year
	Displays a graph showing energy use over a period of time
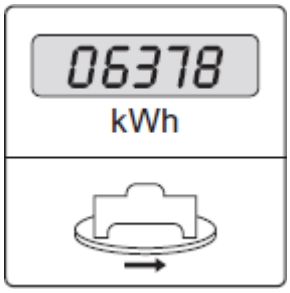	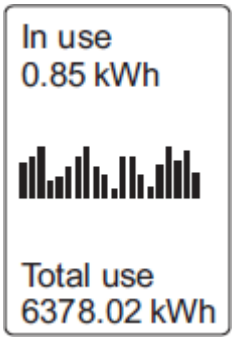

(i) Complete the following sentence.

The reading given by the electronic device is more
_____ than the reading given by the electricity meter.

(1)

(ii) Suggest how data collected and displayed by the electronic device could be useful to the homeowner.

_____

_____

_____

_____

_____

_____

(3)

(Total 8 marks)

Mark schemes

Q1.

(a) 230 V

1

(b) Earth

must be in the correct order

1

Neutral

1

(c) It is easy to identify each wire.

1

(d) current

must be in the correct order

1

shock

1

(e) 50 Hz

1

(f) output = 25 × 16

1

400 (kV)

1

*allow 400 (kV) with no working shown for **2** marks*

(g) It reduces the energy lost due to heating

1

(h) It is safer for consumers

1

[11]

Q2.

(a) 0.093 A

1

(b) 0.093 A

1

(c) (increasing the resistance) decreases the current

1

therefore (the lamp will be) dimmer

1

(d) potential difference = current × resistance

accept correct rearrangement with R as subject

1

(e) 3.3 = 0.15 × R

1

R = 3.3 / 0.15 (Ω)

1

R = 22 (Ω)

1

*allow 22 (Ω) without working shown for **3** marks*

(f) line drawn from the origin with a decreasing gradient.

1

[9]

Q3.

(a) electrons

1

(b)

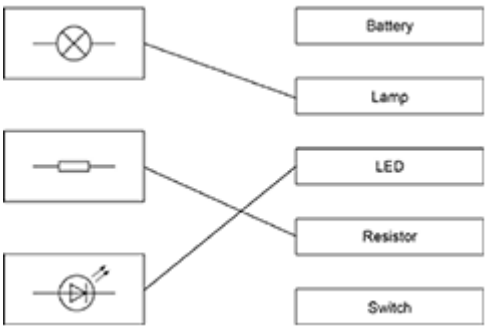

extra lines from a symbol negate the mark

3

(c) the total power = 7360 watts

1

current = 7360 ÷ 230

1

= 32 A

*allow 32 with no working shown for **3** marks*

1

so the current is greater than 30 A

1

(d) to increase the voltage (across the cables) or to decrease the current (through the cables)

1

reducing energy losses (in the cables)

*do **not** allow electricity for energy*

*do **not** allow no energy loss*

1

increasing the efficiency of transmission

1

(e) to decrease the potential difference for domestic use

1

(f) $$efficiency = \frac{useful\ output\ energy\ transfer}{total\ input\ energy\ transfer}$$

1

(g) 405 / 900

1

=0.45

accept 45%

1

allow 0.45 ***or*** *45% with no working shown for* ***2*** *marks*

[15]

Q4.

(a) 1 950 / 2 500 × 100

1

78 (%)

1

(b) expected mass of aluminium

1950 × 54 / 102

1

= 1032.35

1

mass not collected

1032.35 − 1 000

= 32.4

allow 32.4 with no working shown for ***3*** *marks*

1

incorrect number of sig. figs max ***2*** *marks*

(c) because oxygen is formed at the anode

1

which reacts with the carbon anode to produce carbon dioxide

1

and wears it away

1

(d) power = $1.5 \times 10^5 \times 4$

1

= 6.0×10^5 W

1

24 hours = 24 × 60 × 60 = 8.64×10^4 seconds

1

energy transferred = $6.0 \times 10^5 \times 8.64 \times 10^4$

allow ecf from power calculation

1

= 5.184×10^{10}

allow 5.184×10^{10} *with no working for* ***5*** *marks*

1

(e) 3 moles of electrons are needed to produce 27 g or 0.027 kg aluminium

1

so moles of electrons to produce 1 000 kg = 1 000 / 0.027 × 3

1

= 111 000

*allow 111 000 with no working shown for **3** marks*

1

*incorrect no. of sig. figs max **2** marks*

[16]

Q5.

(a) 50 Hz

1

(b) Top: Earth

1

Bottom: Neutral

1

(c) potential difference

1

current

1

(d) energy = 2500 × 180

1

= 450 000

1

= 450 kJ

1

*allow 450 with no working shown for **3** marks*

(e) energy transferred = charge flow × potential difference

allow E = QV

1

(f) 4 200 = Q × 230

1

Q = 4 200 ÷ 230

1

= 18.3 (C)

1

*allow 18.3 with no working shown for **3** marks*

[12]

Q6.

(a)

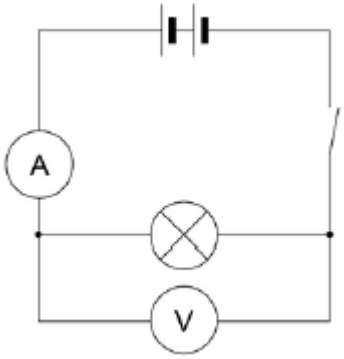

battery connected correct way round **1**

ammeter and voltmeter correct way round **1**

(b) 6.4 V **1**

(c) (the lamp will) get dimmer **1**

because increasing the resistance decreases the current **1**

(d) potential difference = current × resistance

allow V = IR **1**

(e) 3.3 = 0.15 × *R* **1**

R = 3.3 ÷ 0.15 **1**

= 22(Ω) **1**

*allow 22 with no working shown for **3** marks*

[9]

Q7.

(a)

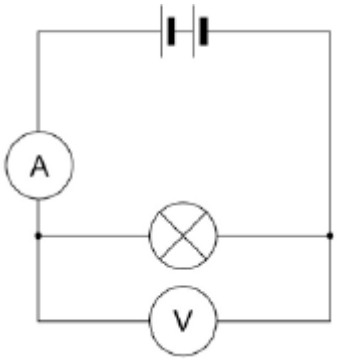

ammeter connected in series **1**

voltmeter connected in parallel **1**

measure the potential difference across the lamp at known current **1**

calculate resistance from measured values using V = IR

1

(b) for ohmic conductors the current is directly proportional to the potential difference applied across it

1

this graph is curved so it is not an ohmic conductor

1

(c) diode

1

because it has a high resistance with negative potential differences

1

and a low resistance for positive potential differences.

1

allow answers in terms of current

(d) tangent to the curve drawn at 2.3 V

1

correct reading of Δy and Δx from graph

1

either

substitution of values into $V = IR$ (1)

1

value of R calculated (1)

accept values in the range 0.50 to 0.65

1

or

calculation of gradient (1)

allow ecf from incorrect readings of Δy and Δx

calculation of R = 1 / gradient (1)

accept values in the range 0.50 to 0.65

[13]

Q8.

(a) (i) 150

1

(ii) transferred to the surroundings by heating

reference to sound negates mark

1

(iii) 0.75

*450 / 600 gains **1** mark*

*accept 75% for **2** marks*

*maximum of **1** mark awarded if a unit is given*

2

(iv) 20 (s)

*correct answer with or without working gains **2** marks*
*correct substitution of 600 / 30 gains **1** mark*

2

(b) (i) to avoid bias

1

(ii) use less power and last longer

1

1 LED costs £16, 40 filament bulbs cost £80

or

filament costs (5 times) more in energy consumption

1

(iii) any **one** from:

- availability of bulbs
- colour output
- temperature of bulb surface

1

[10]

Q9.

(a) (i) any **six** from:

- switch on
- read both ammeter and voltmeter
  allow read the meters
- adjust variable resistor to change the current
- take further readings
- draw graph
- (of) V against I
  allow take mean
- R = V / I
  allow take the gradient of the graph

6

(ii) resistor would get hot if current left on

1

so its resistance would increase

1

(iii) 12 (V)
*0.75 × 16 gains **1** mark*

2

(iv) 15 (Ω)

1

16 is nearer to that value than any other

1

(b) if current is above 5 A / value of fuse

1

fuse melts

allow blows / breaks
*do **not** accept exploded*

1

breaks circuit

1

[15]

Q10.

(a) decreased

correct order only

1

decreased

1

increased

1

(b) (i) A

reason only scores if A chosen

1

uses least / less energy (in 1 year)
a comparison is required
accept uses least power
accept uses least kWh

1

(ii) greater the volume the greater the energy it uses (in 1 year)

1

(iii) a very small number sampled
accept only tested 3
accept insufficient evidence / data
*allow not all fridges have the same efficiency **or** a correct description implying different efficiencies*
only tested each fridge once is insufficient
there are lots of different makes is insufficient

1

[7]

Q11.

(a) advantage

any **one** from:

- produce no / little greenhouse gases / carbon dioxide
  allow produces no / little polluting gases
  allow doesn't contribute to global warming / climate change
  allow produce no acid rain / sulphur dioxide
  reference to atmospheric pollution is insufficient
  produce no harmful gases is insufficient
- high(er) energy density in fuel
  accept one nuclear power station produces as much power

as several gas power stations

nuclear power stations can supply a lot of or more energy is insufficient

- long(er) operating life

allow saves using reserves of fossil fuels or gas

1

disadvantage

any **one** from:

- produce (long term) radioactive waste

accept waste is toxic

accept nuclear for radioactive

- accidents at nuclear power stations may have far reaching or long term consequences
- high(er) decommissioning costs

accept high(er) building costs

- long(er) start up time

1

(b) (i) 12 000 (kWh)

*allow **1** mark for correct substitution eg*

2000 × 6

or

2 000 000 × 6

or

$$\frac{12\,000\,000}{1000}$$

*an answer of 12 000 000 scores **1** mark*

2

(ii) any idea of unreliability, eg

- wind is unreliable

reference to weather alone is insufficient

- shut down if wind too strong / weak
- wind is variable

1

(c) any **one** from:

- cannot be seen
- no hazard to (low flying) aircraft / helicopters
- unlikely to be or not damaged / affected by (severe) weather

unlikely to be damaged is insufficient

- (normally) no / reduced shock hazard

safer is insufficient

less maintenance is insufficient

installed in urban areas is insufficient

1

[6]

Q12.

(a) water moves (from a higher level to a lower level)

1

transferring GPE to KE

1

rotating a turbine to turn a generator

accept driving or turning or spinning for rotating

moving is insufficient

1

transferring KE to electrical energy

*transferring GPE to electrical energy gains **1** mark of the **2** marks available for energy transfers*

1

(b) (TVs in stand-by) use electricity

accept power / energy

1

generating electricity (from fossil fuels) produces CO_2

accept greenhouse gas

accept sulfur dioxide

1

(CO_2) contributes to global warming

accept climate change for global warming

accept greenhouse effect if CO_2 given

accept acid rain if linked to sulfur dioxide

1

(c) a factor other than scientific is given, eg economic, political or legal

personal choice is insufficient

1

[8]

Q13.

(a) (i) 5.88 (watts)

*an answer of 5.9 scores **2** marks*

*allow **1** mark for correct substitution ie*

$0.42 = \frac{\text{power out}}{14}$

*allow **1** mark for an answer of 0.0588 or 0.059*

2

(ii) 8.12

allow 14 – their (a)(i) correctly calculated

1

(b) (i) input power / energy would be (much) less (reducing cost of running)

accept the converse

electricity is insufficient

1

(also) produce less waste energy / power

accept 'heat' for waste energy

1

(as the waste energy / power) increases temperature of the cabinet

1

so cooler on for less time

1

(ii) line graph

need to get both parts correct

accept scattergram or scatter graph

both variables are continuous

allow the data is continuous

1

(c) number of bulbs used-halogen=24 (LED=1)

1

total cost of LED = £30 + £67.20 = £97.20

accept a comparison of buying costs of halogen £36 and LED £30

1

total cost of halogen= 24 x £1.50 + 24 x £16.00 = £420

or

buying cost of halogen is £36 **and** operating cost is £384

accept a comparison of operating costs of halogen £384 and LED £67.20

*allow for **3** marks the difference in total cost is £322.80 if the number 24 has not been credited*

1

statement based on correct calculations that overall LED is cheaper

*must be **both** buying **and** operating costs*

an alternative way of answering is in terms of cost per hour:

buying cost per hour for LED $\left(\frac{£30.00}{48000}\right)$ = 0.0625p/£0.000625

buying cost per hour for halogen = $\left(\frac{£1.50}{2000}\right)$ = 0.075p/£0.00075

*a calculation of both buying costs scores **1** mark*

operating cost per hour for LED = $\left(\frac{£67.20}{48000}\right)$ = 0.14p/£0.0014

operating cost per hour for halogen= $\left(\frac{£16.00}{2000}\right)$ = 0.8p/£0.008

*a calculation of both operating costs scores **1** mark*

all calculations show a correct unit

***all** units correct scores **1** mark*

statement based on correct calculations of **both** buying **and** operating costs, that overall LED is cheaper

*correct statement scores **1** mark*

1

[12]

Q14.

(a)

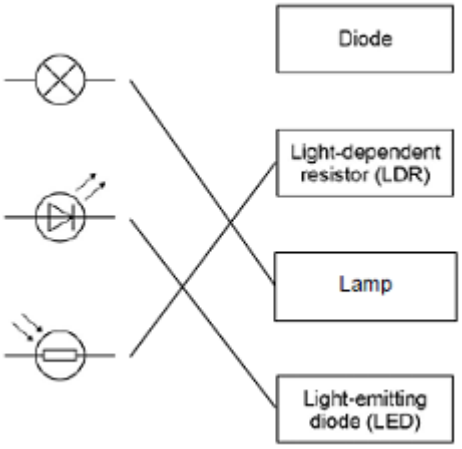

*allow **1** mark for each correct line if more than one line is drawn from any symbol then all of those lines are wrong*

3

(b) (i) half

1

(ii) 3(V)

1

(iii) V_1

1

(c) (i) potential difference / voltage of the power supply

accept the power supply
accept the voltage / volts
accept number of cells / batteries
accept (same) cells / batteries
do not accept same ammeter / switch / wires

1

(ii) bar drawn – height 1.(00)A

ignore width of bar
*allow **1** mark for bar shorter than 3rd bar*

2

(iii) as the number of resistors increases the current decreases

1

[10]

Q15.

(a) (i)

Wire	Plug terminal
Live	C
Neutral	A
Earth	B

*all 3 correct for **2** marks*

*allow **1** mark for 1 correct*

2

(ii) plastic
or
rubber

accept:

ABS
UF / urea formaldehyde
nylon
PVC

1

(b) (i) 600

*allow **1** mark for correct substitution,*

ie $P = \frac{30\,000}{50}$

provided no subsequent step

2

(ii) power is greater than 820 (W)

power is 1200 W is insufficient

1

the lead /cable / wire <u>will</u> overheat / get (too) hot

accept lead / cable will melt
may overheat / get hot is insufficient

1

so there is a risk of fire

accept causing a fire

1

(c) X

any **one** from:

- most / more efficient
- smallest energy input (per second)
- cheapest to operate

mark only scores if X is chosen
mark is for the reason
accept smallest input (power) for same output (power)
accept wastes least energy
smallest (power) input is insufficient
uses least electricity is insufficient

1

[9]

Q16.

(a) (i)

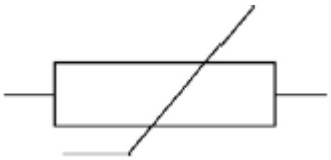

1

(ii) 360

*allow **1** mark for correct substitution, ie 9 = 0.025 × R*

2

(iii) sketch graph of correct shape, ie

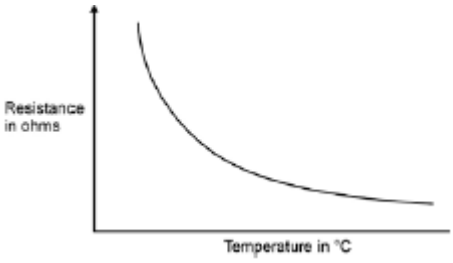

1

(iv) An automatic circuit to switch a heating system on and off.

1

(b) so ammeter reduces / affects current as little as possible

accept so does not reduce / change the current (it is measuring)

accurate reading is insufficient

not change the resistance is insufficient

1

(c) gives a common understanding

accept is easier to share results

accept can compare results

do not need to be converted is insufficient

prevent errors is insufficient

1

(d) replace Bunsen (and water) with a lamp

accept any way of changing light level

1

replace thermometer with light sensor

accept any way of measuring a change in light level

datalogger alone is insufficient

1

[9]

Q17.

(a) water heated by radiation (from the Sun)

accept IR / energy for radiation

1

water used to heat buildings / provide hot water

*allow for **1** mark heat from the Sun heats water if no other*

marks given
*references to photovoltaic cells / electricity scores **0** marks*

1

(b) 2 (minutes)

$1.4 \times 10^3 = \frac{168 \times 10^3}{t}$

*gains **1** mark*
*calculation of time of 120 (seconds) scores **2** marks*

3

(c) (i) 150 (kWh)

1

(ii) £60(.00) or 6000 (p)

*an answer of £6000 gains **1** mark*
*allow **1** mark for 150 × 0.4(0) 150 × 40*
*allow ecf from **(c)(i)***

2

(iii) 25 (years)

an answer of 6000 / 240
or
*6000 / their **(c)(ii)** × 4*
*gains **2** marks*
an answer of 6000 / 60
or
*6000 / their **(c)(ii)** gains **1** mark, ignore any other multiplier of **(c)(ii)***

3

(iv) any **one** from:

- will get £240 per year
  *accept value consistent with calculated value in **(c)(iii)***
- amount of light is constant throughout the year
- price per unit stays the same
- condition of cells does not deteriorate

1

(d) any **one** from:

- angle of tilt of cells
- cloud cover
- season / shade by trees
- amount of dirt

1

[13]

Q18.

(a) decreases

1

(b) a filament bulb

allow bulb

1

an LED

1

(c) Marks awarded for this answer will be determined by the Quality of Communication (QoC) as well as the standard of the scientific response.

0 marks
No relevant content.

Level 1 (1−2 marks)
There is a basic description of the method. This is incomplete and would not lead to any useful results.

Level 2 (3−4 marks)
There is a description of the method which is almost complete with a few minor omissions and would lead to some results.

Level 3 (5−6 marks)
There is a detailed description of the method which would lead to valid results. To gain full marks an answer including graph, or another appropriate representation of results, must be given.

examples of the physics points made in the response:

- read V and I
- read temperature
- apply heat
  allow hot water to cool
- read V and I at least one other temperature
- determine R from V / I
- range of temperatures above 50 °C

extra detail:
- use thermometer to read temperature at regular intervals of temperature
- remove source of heat and stir before taking readings
- details of attaining 0 °C or 100 °C
- last reading taken while boiling
- graph of R against T
- at least 3 different temperatures

6

(d) (i) Q

1

(ii) (80, 3.18)

1

(iii) any **one** from:

- measurement of V too small
- measurement of I too big
- incorrect calculation of R
- thermometer misread
  allow misread meter
  ignore any references to an error that is systematic

1

(iv) any **two** from:

- not portable

allow requires a lot of equipment allow takes time to set up

- needs an electrical supply
- cannot be read directly

accept it is more difficult to read compared to liquid-in-glass

2

[14]

Q19.

(a) (i) temperature (increase) and time switched on are directly proportional

accept the idea of equal increases in time giving equal increases in temperature

answers such as:

- *as time increases, temperature increases*
- *positive correlation*
- *linear relationship*
- *temperature and time are proportional*

*score **1** mark*

2

(ii) any **one** from:

"it" refers to the metal block

- energy transfer (from the block) to the surroundings

accept lost for transfer

accept air for surroundings

- (some) energy used to warm the heater / thermometer (itself)

accept takes time for heater to warm up

- (metal) block is not insulated

1

(iii) 15 000

*allow **1** mark for correct substitution, ie 50 × 300 provided no subsequent step shown*

2

(b) lead

reason only scores if lead is chosen

1

needs least energy to raise temperature by 1°C

accept needs less energy to heat it (by the same amount)
lowest specific heat capacity is insufficient

1

[7]

Q20.

(a) (i) to obtain a range of p.d. values

accept increase / decrease current / p.d. / voltage / resistance

accept to change / control the current / p.d. / voltage / resistance

to provide resistance is insufficient

a variable resistor is insufficient

*do **not** accept electricity for current*

1

(ii) temperature of the bulb increases

accept bulb gets hot(ter)

accept answers correctly

expressed in terms of collisions between (free) electrons and ions / atoms

bulb gets brighter is insufficient

1

(iii) 36

*allow **1** mark for correct substitution, ie 12 × 3 provided no subsequent step shown*

2

watt(s) / W

accept joules per second / J/s

*do **not** accept w*

1

(b) Marks awarded for this answer will be determined by the Quality of Written Communication (QWC) as well as the standard of the scientific response. Examiners should also refer to the information in the Marking guidance, and apply a 'best-fit' approach to the marking.

0 marks
No relevant content.

Level 1 (1-2 marks)
There is a basic comparison of either a cost aspect or an energy efficiency aspect.

Level 2 (3-4 marks)
There is a clear comparison of either the cost aspect or energy efficiency aspect
OR
a basic comparison of both cost and energy efficiency aspects.

Level 3 (5-6 marks)
There is a detailed comparison of both the cost aspect and the energy efficiency aspect.

For full marks the comparisons made should support a conclusion as to which type of bulb is preferable.

Examples of the points made in the response:

cost

- halogen are cheaper to buy
  simply giving cost figures is insufficient
- 6 halogen lamps cost the same as one LED
- LEDs last longer
- need to buy 18 / more halogen lamps to last the same time as one LED

- 18 halogens cost £35.10
- costs more to run a halogen than LED
- LED has lower maintenance cost (where many used, eg large departmental store lighting)

energy efficiency

- LED works using a smaller current
- LED wastes less energy
- LEDs are more efficient
- LED is 22% more energy efficient
- LED produces less heat
- LED requires smaller input (power) for same output (power)

6

[11]

Q21.

(a) 35

*an answer with more than 2 sig figs that rounds to 35 gains **2** marks*

*allow **2** marks for correct method, ie* $\frac{230}{6.5}$

*allow **1** mark for I = 6.5 (A) **or** R =* $\frac{230}{26}$

*an answer 8.8 gains **2** marks*

*an answer with more than 2 sig figs that rounds to 8.8 gains **1** mark*

3

(b) (maximum) current exceeds maximum safe current for a 2.5 mm^2 wire

accept power exceeds maximum safe power for a 2.5 mm^2 wire

or

(maximum) current exceeds 20 (A)

(maximum) current = 26 (A) is insufficient

1

a 2.5 mm^2 wire would overheat / melt

accept socket for wire

*do **not** accept plug for wire*

1

(c) a.c. is constantly changing direction

accept a.c. flows in two directions

accept a.c. changes direction

a.c. travels in different directions is insufficient

1

d.c. flows in one direction only

1

[7]

Q22.

(a) 25(Ω)

1

(b) (i) 2(V)

*allow **1** mark for showing a correct method, ie 6 / 3*

2

(ii) equal to

1

[4]

Q23.

(a) (i) 50 (Hz)

1

(ii) 2760 (W)

1

(b) 12

*allow **1** mark for correct substitution, ie 2400/200*

or

*allow **1** mark for 2760/230 provided no subsequent step shown*

2

amps

1

(c) the charge is <u>directly</u> proportional to the time switched on for

*accept for **1** mark the longer time (to boil), the greater amount of charge*

***or** positive correlation*

***or** they are proportional*

2

[7]

Q24.

(a) (i) symbol for a diode 

accept 

1

symbol for a variable resistor 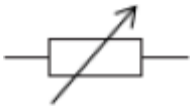

1

(ii) voltmeter is in series **or** voltmeter is not in parallel

1

ammeter is in parallel **or** ammeter is not in series

accept an answer in terms of how the circuit should be corrected

voltmeter and ammeter are wrong way around is insufficient

1

(b) (i) 0.2 (V)

accept any value between 0.20 and 0.21 inclusive

1

(ii) 37.5

*allow **1** mark for I = 0.008*
or
*allow **2** marks for correct substitution, ie 0.3 = 0.008 × R*
or
*allow **1** mark for a correct substitution using I = 0.8 **or** I = 0.08*
***or** I = 0.009*
or
*allow **2** marks for answers of 0.375 **or** 3.75 **or** 33(.3)*

3

(c) (i) 25

*allow **1** mark for obtaining period = 0.04(s)*

2

(ii) diode has large resistance in reverse / one direction

1

so stops current flow in that / one direction

allow diodes only let current flow one way / direction

*allow **1** mark for the diode has half-rectified the (a.c. power) supply*

1

[12]

Q25.

(a) iron

1

hairdryer

1

kettle

1

answers can be in any order

(b) (i) **Y**

1

(ii) bar drawn with any height greater than **Y**

ignore width of bar

1

(c) (bigger volume) takes more time (to boil)

accept explanation using data from graph

1

(so) more energy transferred

*do **not** accept electricity for energy*

1

(and) this costs more money

ignore reference to cost of water

wasting more money because heating more water than needed is insufficient

1

[8]

Q26.

(a) £16.50

*allow **1** mark for correct substitution ie 110 × 15*

*an answer of 1650 gains **both** marks*

*an answer of 43.80 gains **both** marks*

*allow **1** mark for 292 × 15*

2

(b) 292

*allow **1** mark for correctly using the reading 53490 ie 53782 – 53490*

accept £43.80 for both marks

2

[4]

Q27.

(a) (i) kinetic

*do **not** accept movement*

1

(ii) thermal sound

accept heat for thermal
*do **not** accept noise for sound*

***both** answers required in either order*

1

(b) transferred to surroundings / surrounding molecules / atmosphere

'it escapes' is insufficient

or
becomes dissipated / spread out

accept warms the surroundings

accept degraded / diluted

accept a correct description for surroundings eg to the washing machine

*do **not** accept transformed into heat on its own*

1

(c) (i) 3 (.0 p)

*allow **1** mark for correct substitution of correct values ie 0.2 x 15*

*allow **1** mark for calculating cost at 40°C (16.5p)*

or

cost at 30°C (13.5p)

2

(ii) any **two** from:

- less electricity needed

  ignore answers in terms of the washing machine releasing less energy
  an answer in terms of the washing machine releasing CO_2 negates mark
  *do **not** accept less energy is produced*

- fewer power stations needed

- less fuel is burned

  accept a correctly named fuel
  *do **not** accept less fuel is needed*

2

[7]

Q28.

(a) (i) connect the earth wire (to pin)

answers must be in terms of correcting the faults

1

screw cable grip (across cable)

accept tighten the cable grip

1

(ii) any **two** from:

- fuse gets (very) hot
- fuse melts

  accept blows for melts
  *do **not** accept break / snap fuse / blow up*

- circuit breaks / switches off

  accept stops current flowing

2

(b) any **two** from:

- hairdryer is plugged into mains (electricity socket)

  it refers to hairdryer
  hairdryer works from the mains

  or
  hairdryer is using 230 V

  accept 240 for 230

- water conducts electricity

  *do **not** accept water and electricity don't mix*

- radio is low power / current / pd / voltage

  accept radio not connected to the mains
  *do **not** accept radio is waterproof*

- (the current in / pd across) hairdryer more likely to give a (fatal) electric shock

  accept the idea of electrocution if hairdryer is wet
  accept the idea of radio not causing electrocution if wet

2

[6]

Q29.

(a) (i) ammeter symbol correct and drawn in series

accept 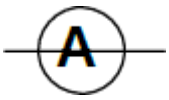

*do **not** accept lower case a*

1

voltmeter symbol correct and drawn in parallel with the material

*do **not** accept* 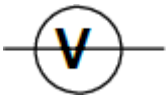

1

(ii) adjust / use the variable resistor

accept change the resistance

or

change the number of cells

accept battery for cell
accept change the pd / accept change the voltage
accept increase / decrease for change

1

(b) (i) 37.5 (Ω)

accept answer between 36 and 39 inclusive

1

(ii) 5.6(25) **or** their (b)(i) × 0.15

*allow **1** mark for correct substitution ie 37.5 **or** their (b)(i) × 0.15 provided no subsequent step shown*

2

(c) (i) the thick<u>er</u> the putty the low<u>er</u> the resistance

answer must be comparative
accept the converse

1

(ii) any **one** from:

- measuring length incorrectly

  accept may be different length

- measuring current incorrectly

  *do **not** accept different currents*

- measuring voltage incorrectly

  *do **not** accept different voltage*

- ammeter / voltmeter incorrectly calibrated

- thickness of putty not uniform

  *do **not** accept pieces of putty not the same unless qualified*

- meter has a zero error

  *do **not** accept systematic / random error*

  accept any sensible source of error eg putty at different temperatures
  *do **not** accept human error without an explanation*
  *do **not** accept amount of putty not same*

1

[8]

Q30.

(a) d.c. flows in (only) one direction

1

a.c. <u>changes</u> direction (twice every cycle)

accept a.c. constantly changing direction

ignore references to frequency

1

(b) a current flows through from the live wire / metal case to the earth wire

accept a current flows from live to earth

*do **not** accept on its own if the current is too high*

1

this current causes the fuse to melt

accept blow for melt

*do **not** accept break / snap / blow up for melt*

1

[4]

Q31.

(a) (i) conduction

1

convection

1

correct order only

(ii) to keep the ceramic bricks hot for a longer time

1

(b) (i) $E = P \times t$

18.2

*allow **1** mark for correct substitution ie 2.6 × 7 provided that no subsequent step is shown*

2

(ii) 91 (p)
or their (b)(i) × 5 correctly calculated

accept £0.91

*do **not** accept 0.91 without £ sign*

1

(c) $E = m \times c \times \theta$

2 250 000

*allow **1** mark for correct substitution ie 120 × 750 × 25 provided that no subsequent step is shown*

answers 2250 kJ or 2.25 MJ gain both marks

2

[8]

Q32.

(a) $E = P \times t$

91 (p)

an answer £0.91 gains 3 marks

an answer 0.91 gains 2 marks

*allow **2** marks for energy transferred = 18.2 (kWh)*

or

substitution into 2 equations combined, ie 2.6 × 7 × 5

*allow **1** mark for correct substitution into E = P × t, ie E = 2.6 × 7*

or

*allow **1** mark for multiplying and correctly calculating an incorrect energy transfer value by 5*

3

(b) answers should be in terms of supply exceeding demand

accept there is a surplus / excess of electricity (at night)

1

(c) reduce (rate of) energy transfer (from ceramic bricks)

accept heat for energy

*do **not** accept no energy / heat escapes*

*do **not** accept answers in terms of lost / losing heat if this implies heat is wasted energy*

1

so keeping the (ceramic) bricks hot for longer

accept increase time that energy is transferred to the room

accept keep room warm for longer

or

to stop the casing getting too hot

accept so you do not get burnt (on the casing)

1

(d) $E = m \times c \times \theta$

120

*allow **1** mark for correct substitution*

ie 9 000 000 = m × 750 × 100

2

[8]

Q33.

(a) (i) $$efficiency = \frac{useful\ energy\ out\ (\times 100\%)}{total\ energy\ in}$$

1.6 (W)

*allow **1** mark for correct substitution ie* $0.2 / \frac{20}{100} = \frac{output}{8}$

2

(ii) $$efficiency = \frac{useful\ energy\ out\ (\times 100\%)}{total\ energy\ in}$$

32 (%) / 0.32
or
their (a)(i) ÷ 5 correctly calculated
ignore any units

1

(b) (i) any **two** from:

- comparison over same period of time of relative numbers of bulbs required eg over 50 000 hours 5 CFL's required to 1 LED
  accept an LED lasts 5 times longer

- link number of bulbs to cost eg 5 CFL's cheaper than 1 LED
  an answer in terms of over a period of 50 000 hours CFLs cost £15.50 (to buy), LED costs £29.85 (to buy) so CFLs are cheaper scores both marks
  an answer in terms of the cost per hour (of lifetime) being cheaper for CFL scores 1 mark if then correctly calculated scores both marks

- over the same period of time LEDs cost less to operate (than CFLs)

2

(ii) any **one** from:

- price of LED bulbs will drop
  *do **not** accept they become cheaper*

- less electricity needs to be generated
  accept we will use less electricity

- less CO_2 produced

- fewer chips needed (for each LED bulb)

- fewer bulbs required (for same brightness / light)

- less energy wasted
  *do **not** accept electricity for energy*

1

[6]

Q34.

(a) (i) TV

1

(ii) hairdryer and sandwich toaster

both required either order but no others

1

(b) (i) 1.2

*allow **1** mark for correct substitution*

ie 0.4 × 3 provided that no subsequent step is shown

2

(ii) 18

accept £0.18 for both marks

or

their (b)(i) × 15 correctly calculated

*an answer 0.18 scores **1** mark*

*allow **1** mark for correct substitution*

ie 1.2 or their (b)(i) × 15 provided that no subsequent step is shown

2

[6]

Q35.

(a) (i) food processor

hairdryer

both required and no other

either order

1

(ii) TV

Table lamp

Food processor

all required and no other

any order

1

(b) any **two** from:

- transfers / requires / uses more energy / power

  accept more electricity used

  accept higher power

- more electricity needs to be generated

- more (fossil) fuels (likely) to be burnt

  accept a named fossil fuel

2

(c) (i) precise

this answer only

1

(ii) any **three** from:

- can look for trends / patterns

- help reduce energy use / consumption

- reduce bills
  accept save money
- identify appliances which use a lot of energy
- replace appliances with more efficient ones
- see effect of leaving appliances on (standby)
  to monitor usage is insufficient
  answers in terms of environment are insufficient

3

[8]